HARDWARE SUPPORT DOCUMENTATION

FOR THE CHYRON MAXINE!

Publ. No. 2A01697

CHYRON
Graphics

BROADCAST STORE NY
ENGINEERING LIBRARY

MAXINE! LOGIC DIAGRAMS
Table Of Contents

2A01324	Keyboard Schematics
2A01548	Frame Buffer Board
2A01707	Video Board
2A01708	Floppy Drive Board
2A01709	CPU I/F Board
2A01710	Backplane
2A01711	Keyboard I/F Board
2A01779	Video Input Module
2A01886	Extended Effects Frame Buffer Vram
2A01874	Extended Effects Frame Buffer

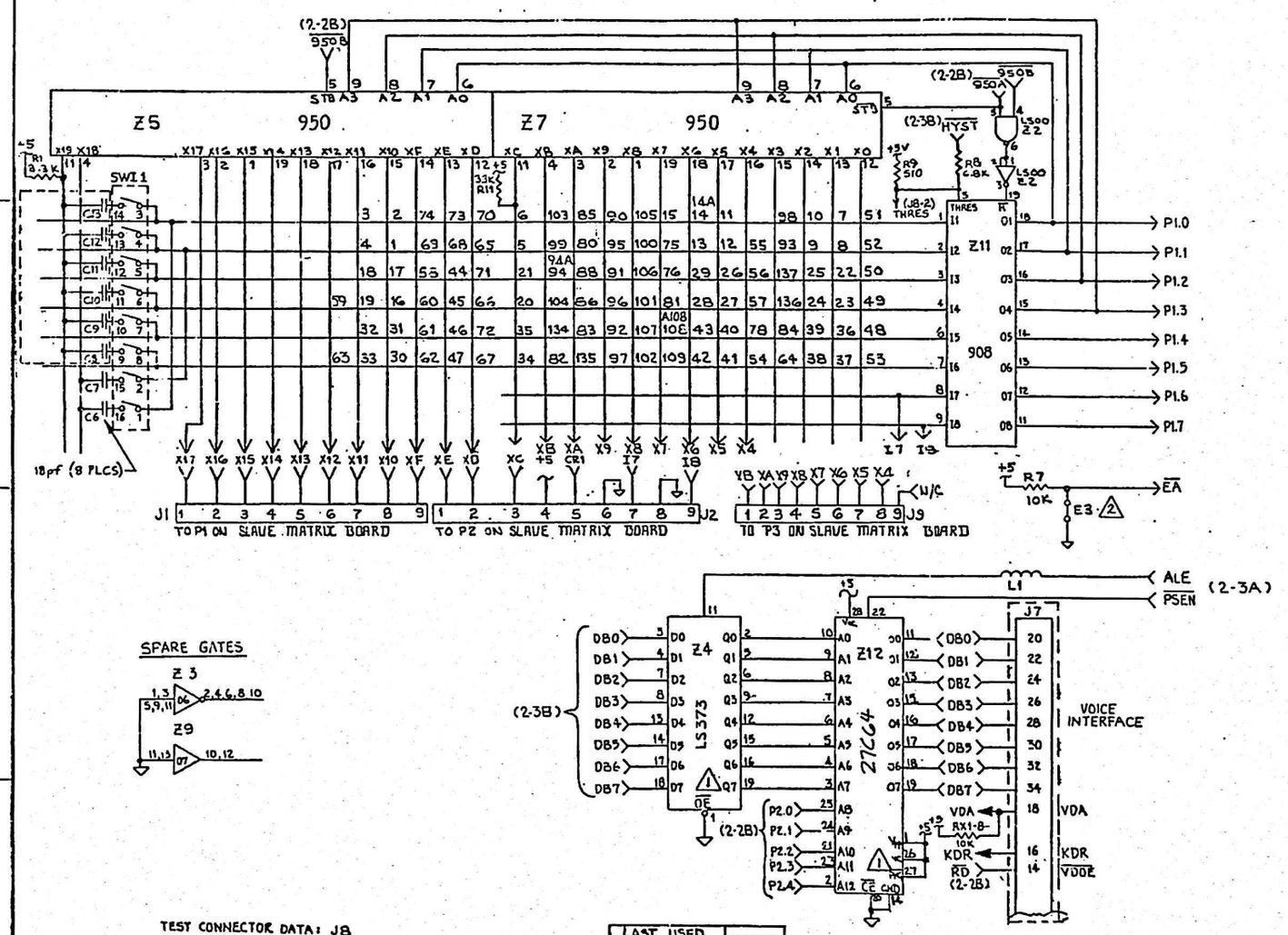

MOTHER BOARD

TEST CONNECTOR DATA: J8

PIN 1 - N/C PIN 3 - N/C

PIN 2 - THRES PIN 4 - N/C

2 ON MASKED ASSY. DELETE CONNECTION AT E3.

1 ON EMULATED ASSY. INSTALL Z4, Z12, AND 8032 AT Z13.

LAST USED REF. DESIG.				UNUSED	
Z14	J9	C45	P3	J5	CR6
RX2	R15	CR8	EC	C2	C5
LS1	Y1	E14	L1	C3	C4
				E13	

NOTES:

CHYRON CORPORATION

5 Hub Drive
Melville, New York 11747

TITLE KEYBOARD SCHEMATICS
SCRIBE JR. INFINITI

B 2A0 1324 REV

SHEET 1 OF 2

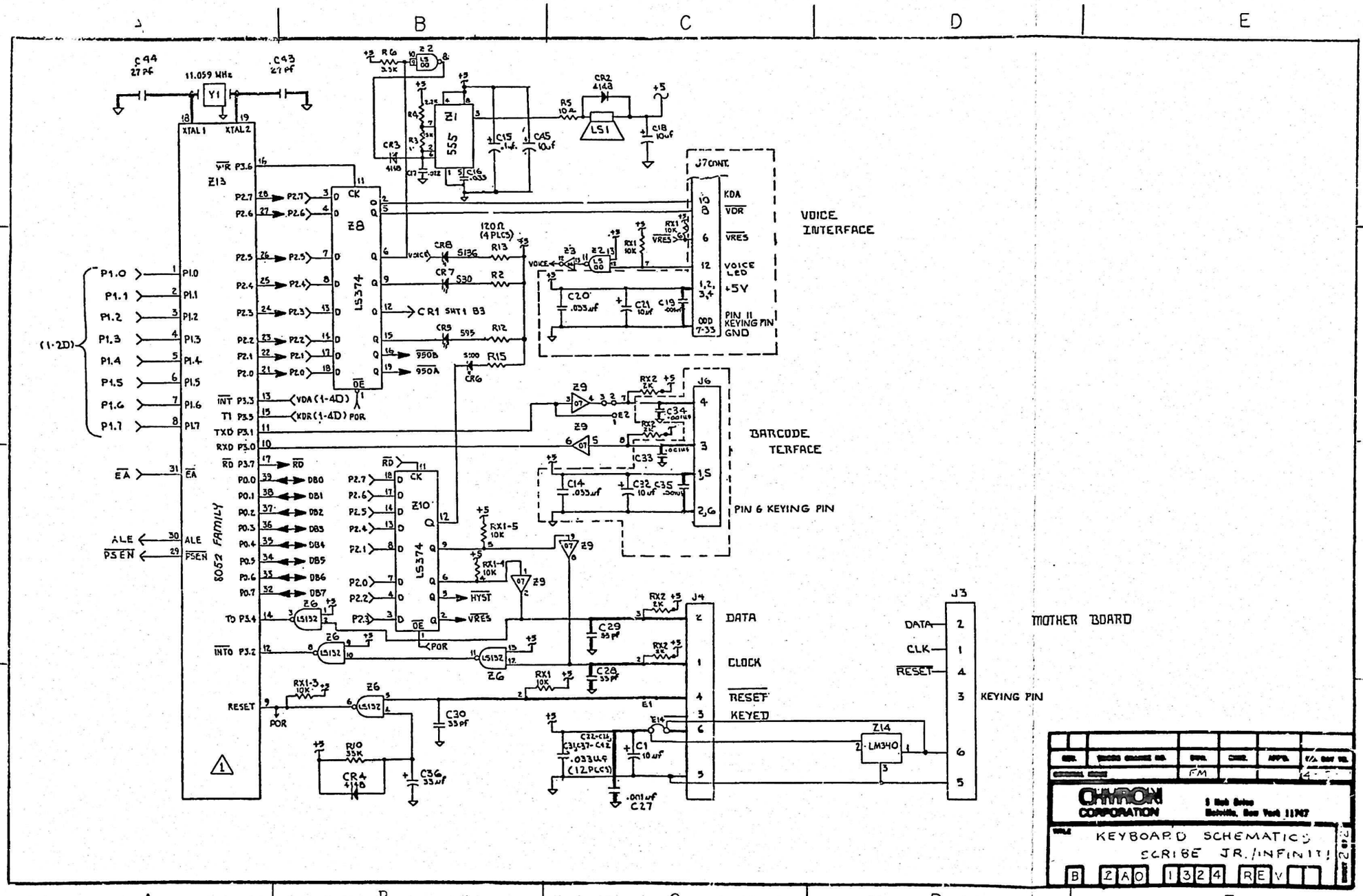

VOICE INTERFACE
BARCODE TERFACE
PIN 6 KEYING PIN
MOTHER BOARD
KEYING PIN
DATA
CLOCK
RESET
KEYED
8052 FAMILY
11.059 MHz
Z13
Z8
LS374
Z10
555
Z1
LS1
J7 CONT.
J6
J4
J3
Z14
LM340
CR1 SHT1 B3
CHYRON CORPORATION
KEYBOARD SCHEMATICS
SCRIBE JR./INFINITI
B 2A0 1324 REV

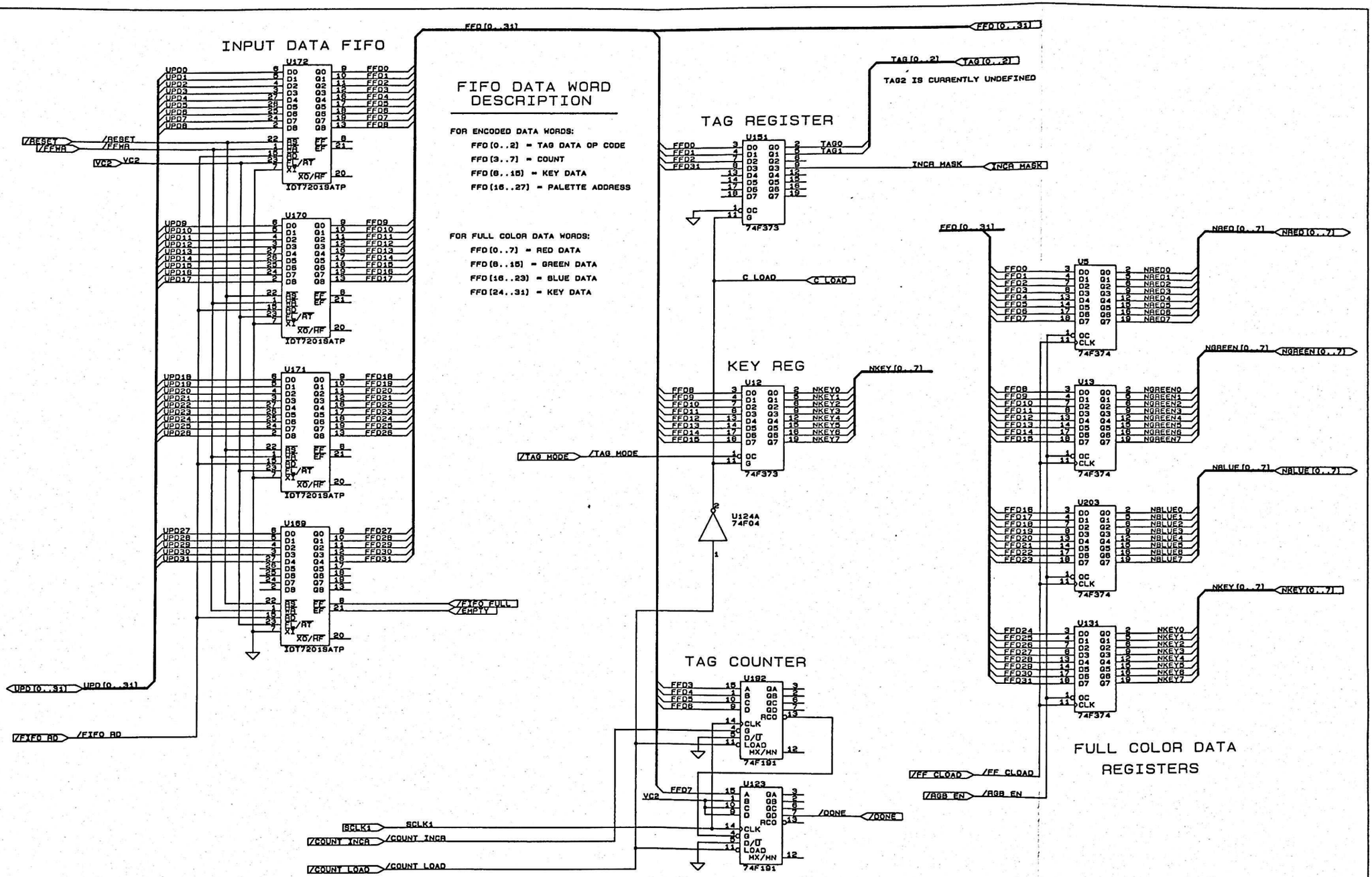

REV.	ENGRG CHANGE NO.	DWN	CHKD.	APP'D.	NO. DAY YR.
ORIGINAL ISSUE		SH			4-17-92

CHYRON CORPORATION
5 Hub Drive
Melville, New York 11747

TITLE: FRAME BUFFER FOR INFINIT! FIFO, TAG COUNTER, RGB REGS (REV C ARTWORK)

SH 1 OF 15

DOCUMENT NUMBER: 2A01548 REV G

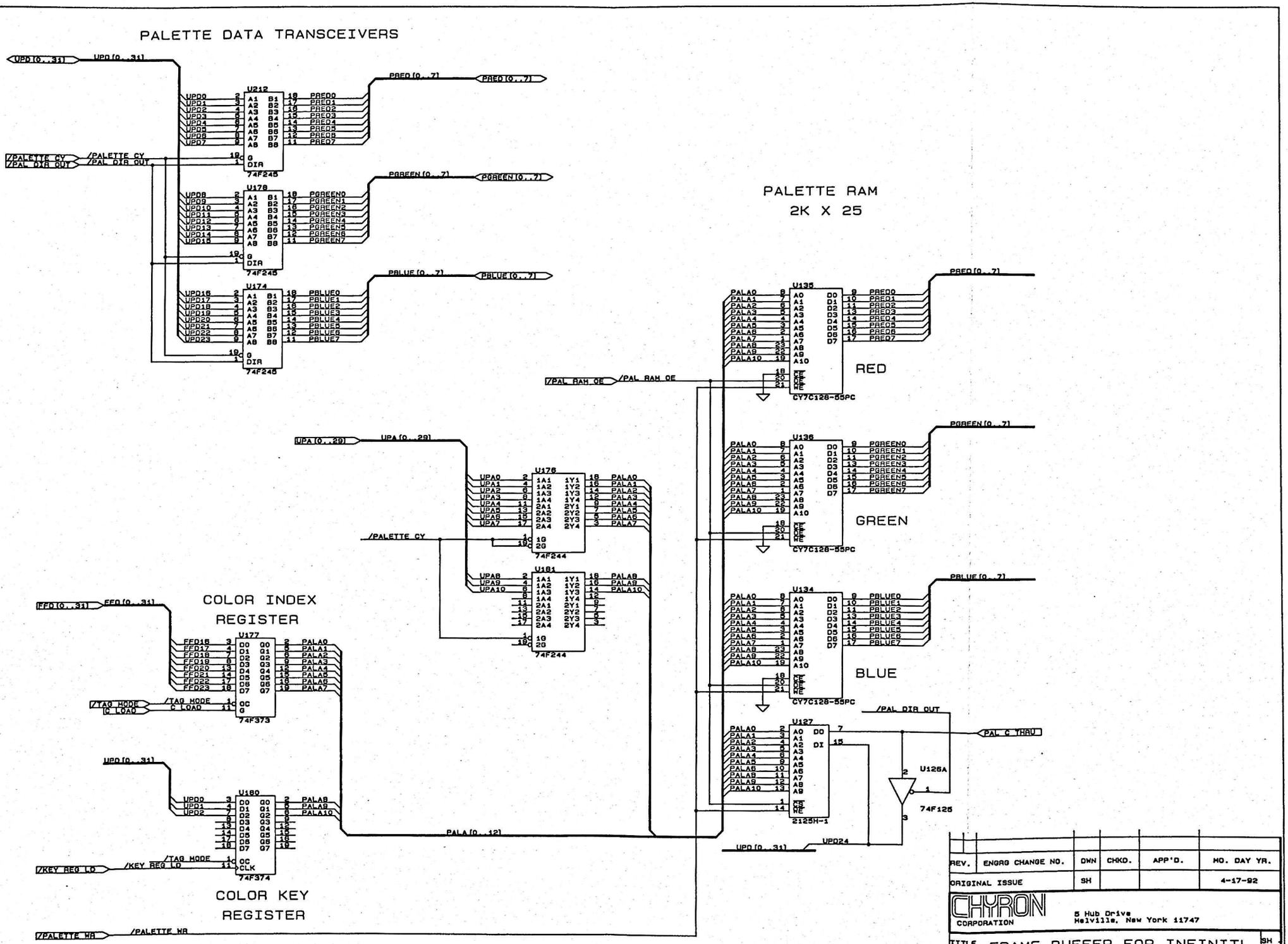

REV.	ENGRG CHANGE NO.	DWN	CHKD.	APP'D.	MO. DAY YR.
ORIGINAL ISSUE		SH			4-17-92

CHYRON CORPORATION
5 Hub Drive
Melville, New York 11747

TITLE: FRAME BUFFER FOR INFINIT! COLOR REGISTERS AND PALETTE (REV C ARTWORK)

DOCUMENT NUMBER: 2A01548 REV G

SH 2 OF 15

VRAM OUTPUT REGISTERS

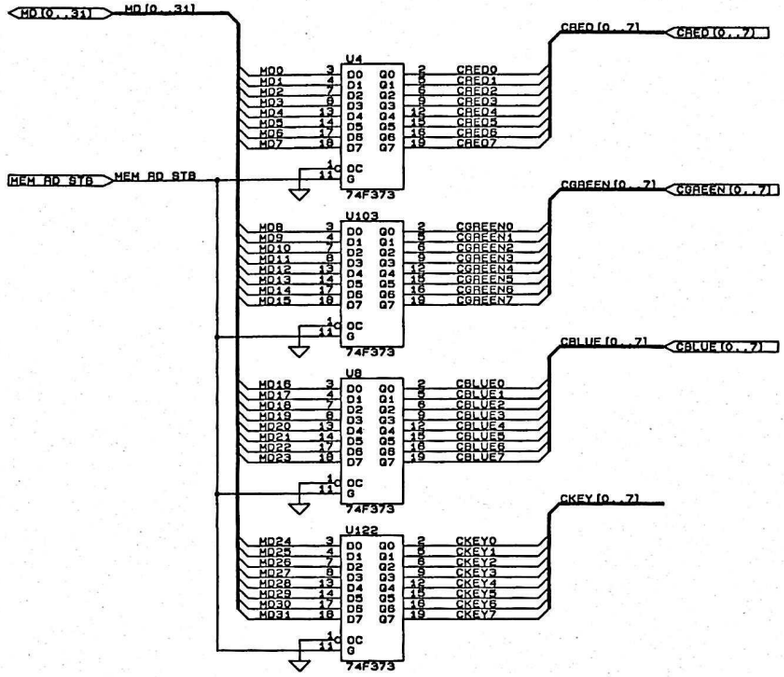

VRAM OUTPUT BUFFER FOR VSB READS

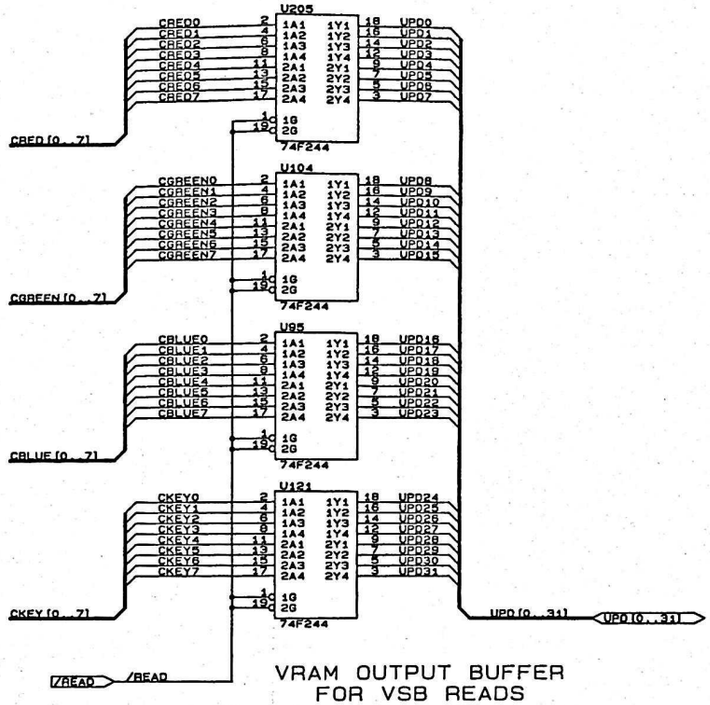

MEMORY DATA PULL-UPS

USED FOR REV. A VRAMS BY TOSHIBA.

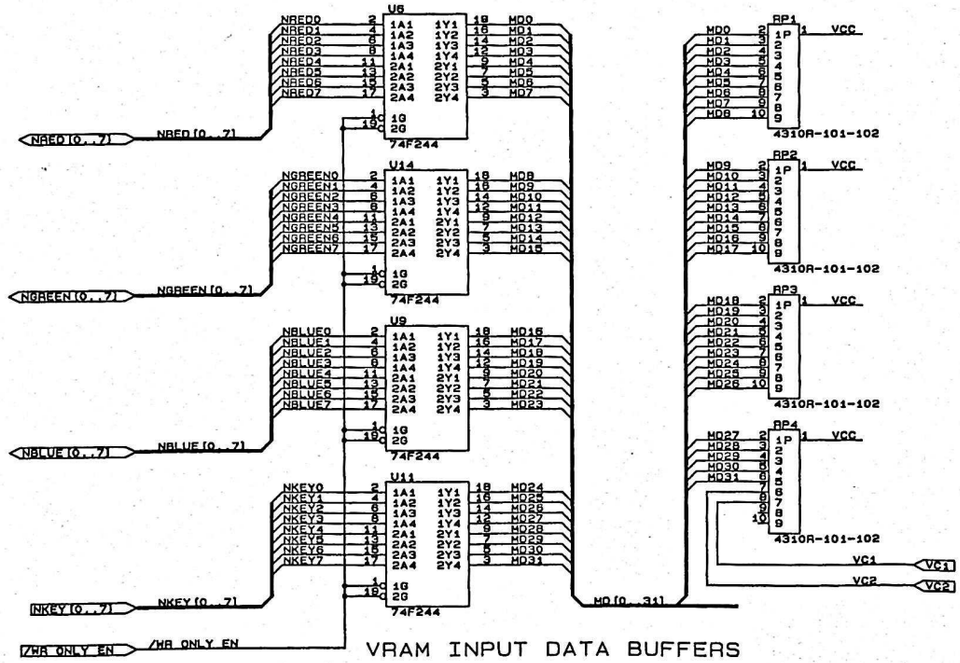

VRAM INPUT DATA BUFFERS FOR NON-RMWS

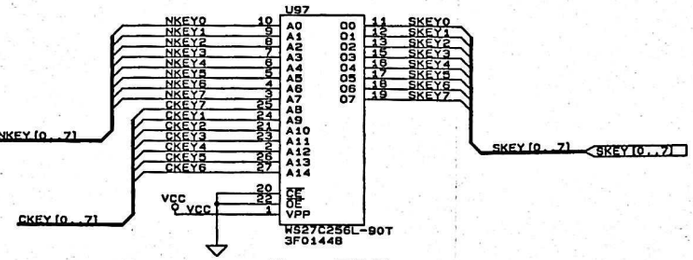

Key PROM

CALCULATES: NKEY + CKEY (1 - NKEY)

REV.	ENGRG CHANGE NO.	DWN	CHKD.	APP'D.	MO. DAY YR.
ORIGINAL ISSUE		SH			03-11-91

CHYRON CORPORATION
5 Hub Drive
Melville, New York 11747

TITLE: FRAME BUFFER FOR INFINIT!
VRAM I/O BUFFERS & REGISTERS
(REV C ARTWORK)

SH 3 OF 15

DOCUMENT NUMBER: 2A01548 REV C

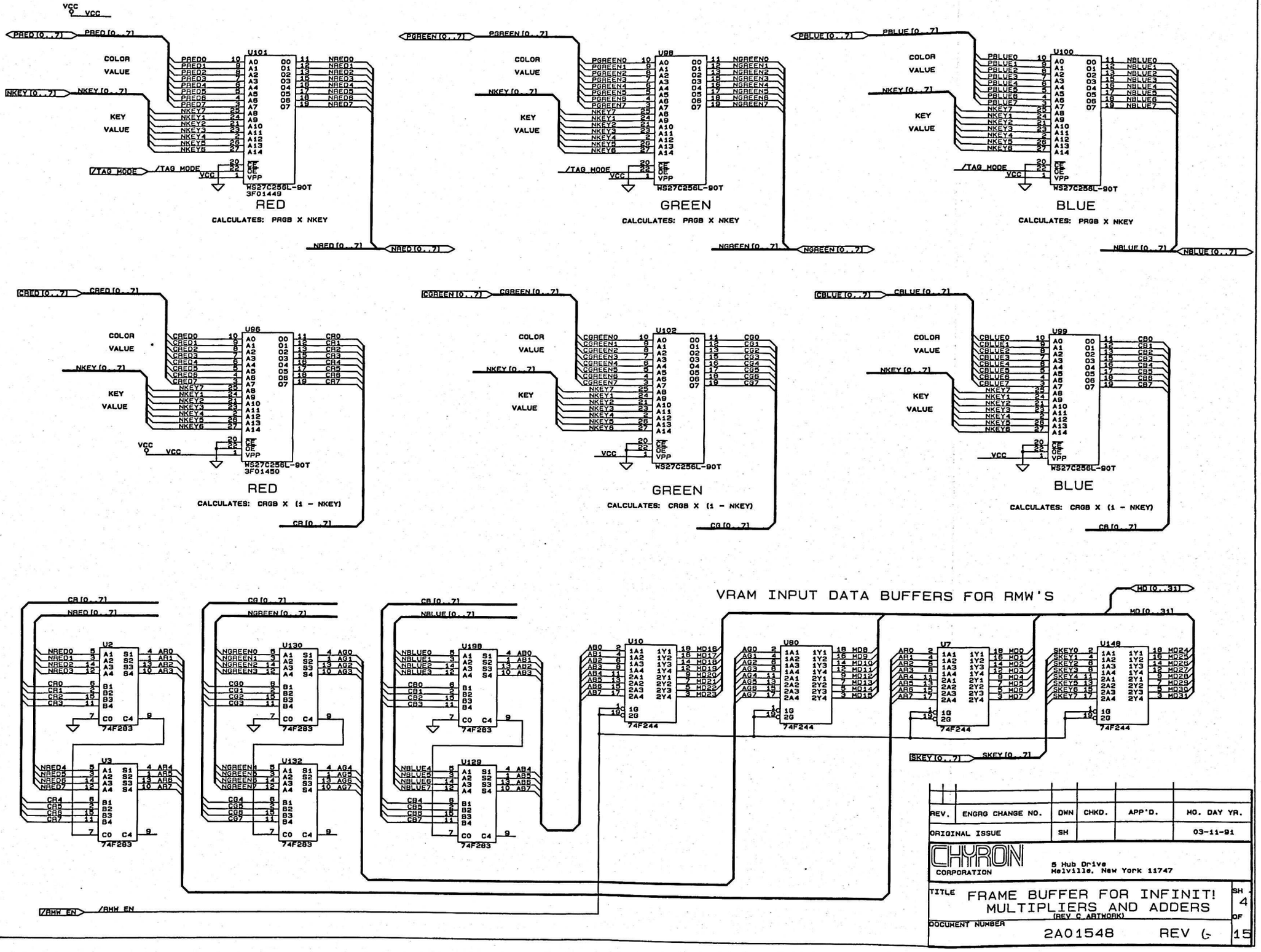

REV.	ENGRG CHANGE NO.	DWN	CHKD.	APP'D.	MO. DAY YR.
ORIGINAL ISSUE		SH			03-11-91

CHYRON CORPORATION
5 Hub Drive
Melville, New York 11747

TITLE: FRAME BUFFER FOR INFINIT! MULTIPLIERS AND ADDERS (REV C ARTWORK)

SH 4 OF 15

DOCUMENT NUMBER 2A01548 REV C

VERTICAL DISPLAY COUNTER

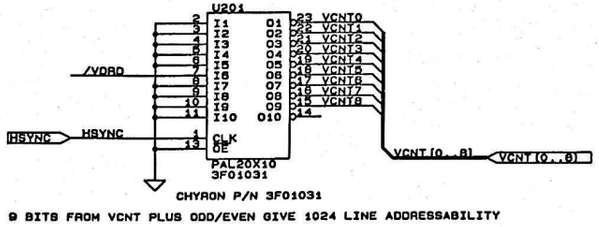

9 BITS FROM VCNT PLUS ODD/EVEN GIVE 1024 LINE ADDRESSABILITY

BUFFER SELECT PAL

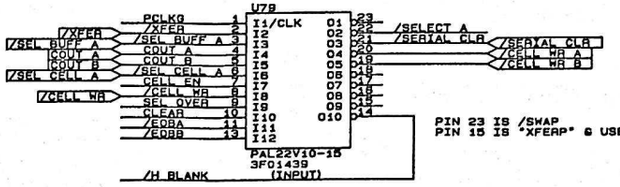

PIN 23 IS /SWAP
PIN 15 IS "XFERP" & USED INTERNALLY

SERIAL OUTPUT ENABLE PALS

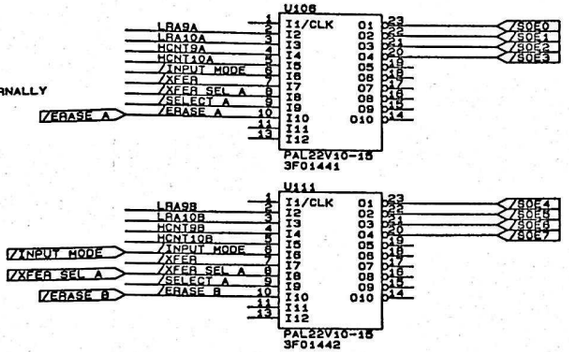

BUFFER A HORIZONTAL DISPLAY COUNTERS

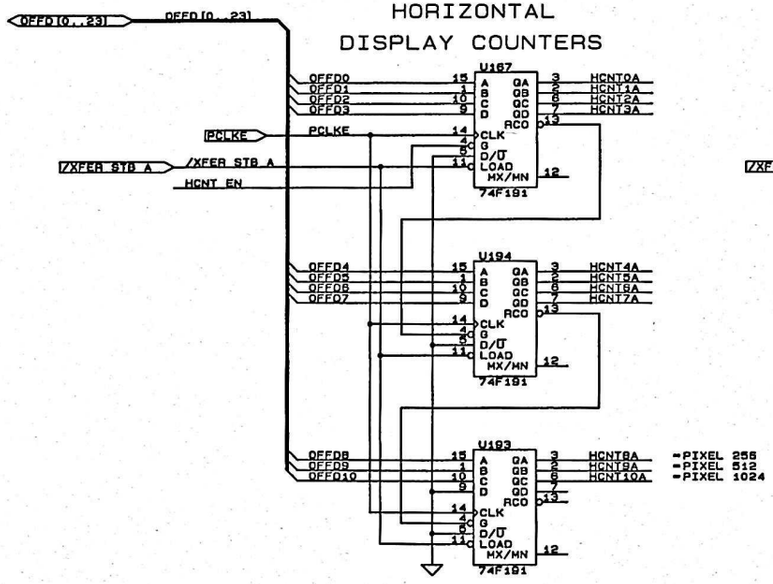

BUFFER B HORIZONTAL DISPLAY COUNTERS

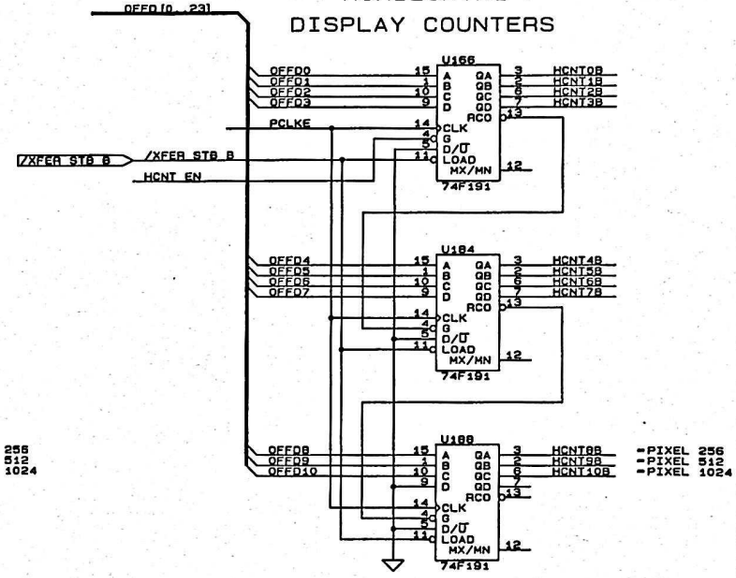

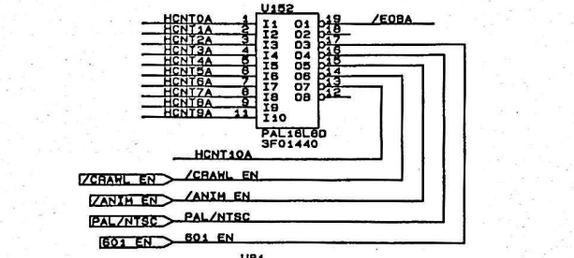

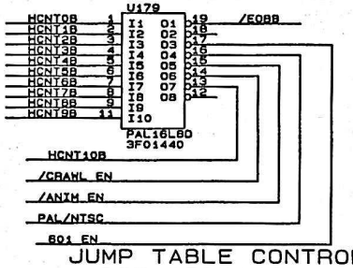

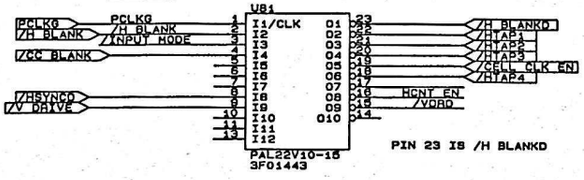

PIN 23 IS /H BLANKD

JUMP TABLE CONTROL BIT REGISTER

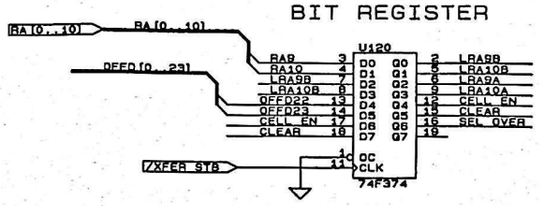

Horizontal Blanking Delay

REV.	ENGRG CHANGE NO.	DWN	CHKD.	APP'D.	MO. DAY YR.
ORIGINAL ISSUE		SH			03-11-91

CHYRON CORPORATION
5 Hub Drive
Melville, New York 11747

TITLE: FRAME BUFFER FOR INFINIT!
VIDEO ADDRESS GENERATORS
(REV C ARTWORK)

SH 5 OF 15

DOCUMENT NUMBER 2A01548 REV G

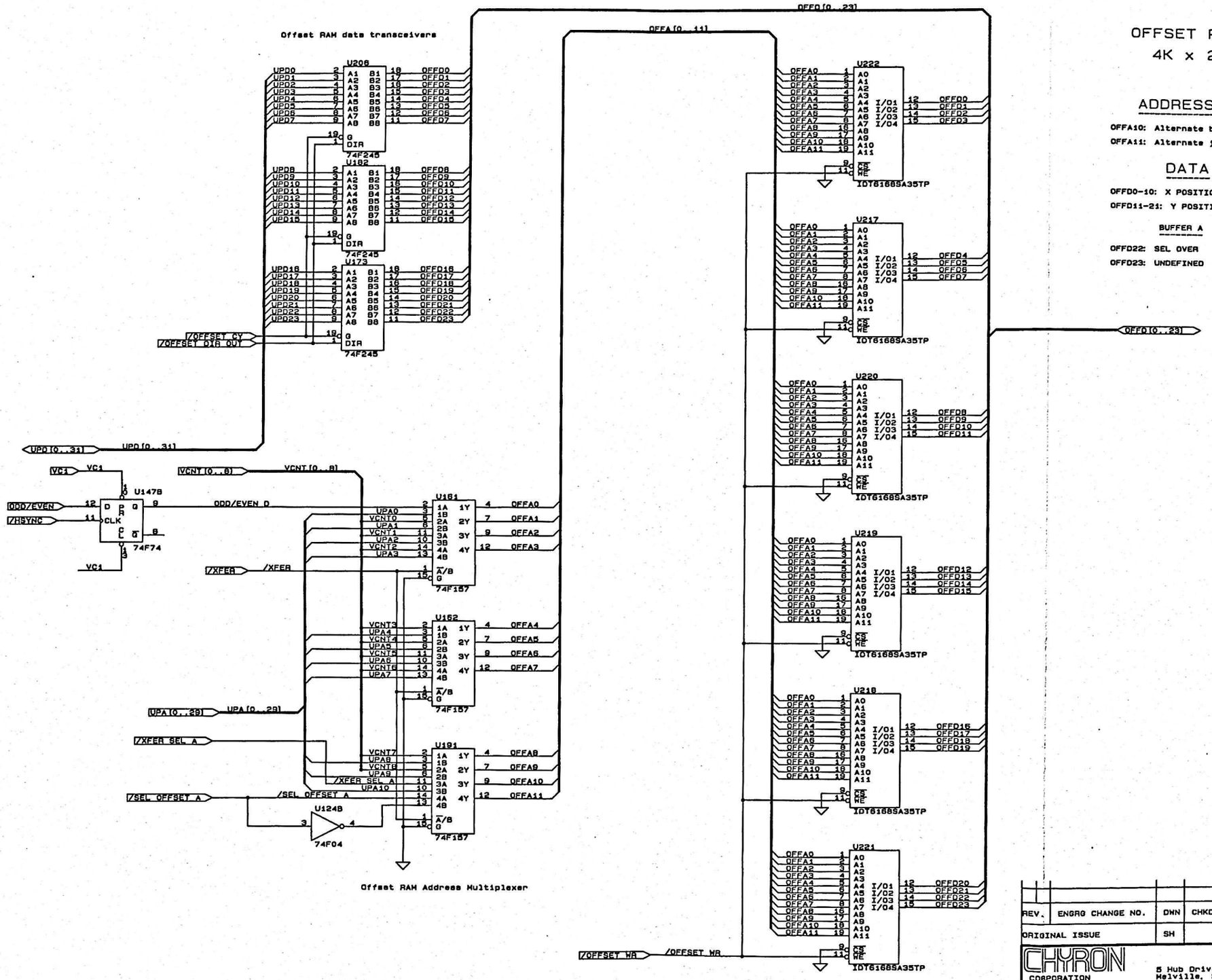

OFFSET RAMS
4K x 24

ADDRESSING

OFFA10: Alternate buffer select

OFFA11: Alternate jump table select

DATA

OFFD0-10: X POSITION OFFSET

OFFD11-21: Y POSITION OFFSET

	BUFFER A	BUFFER B
OFFD22:	SEL OVER	CELL EN
OFFD23:	UNDEFINED	CLEAR

REV.	ENGRG CHANGE NO.	DWN	CHKD.	APP'D.	MO. DAY YR.
ORIGINAL ISSUE		SH			03-11-91

CHYRON CORPORATION
5 Hub Drive
Melville, New York 11747

TITLE: FRAME BUFFER FOR INFINIT!
JUMP TABLES
(REV C ARTWORK)

DOCUMENT NUMBER: 2A01548 REV 6

SH. 6 OF 15

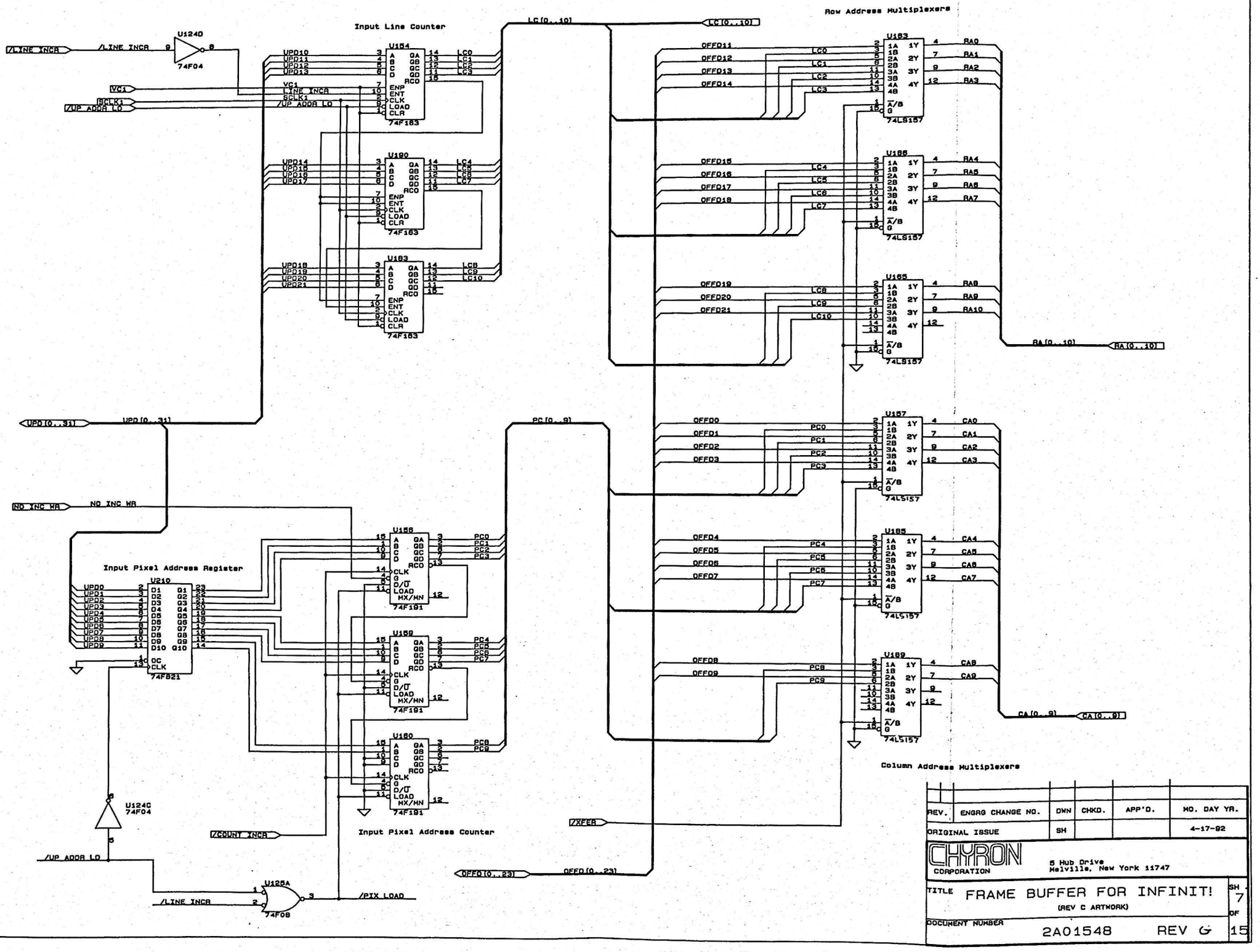
Input Line Counter
Row Address Multiplexers
Input Pixel Address Register
Input Pixel Address Counter
Column Address Multiplexers
/LINE INCA
VC1
SCLK1
/UP ADDR LO
UPD[0..31]
NO INC WR
/COUNT INCA
/XFER
/PIX LOAD
LC[0..10]
PC[0..9]
OFFD[0..23]
RA[0..10]
CA[0..9]
74F04
74F163
74F191
74F821
74LS157
74F08
REV. | ENGRG CHANGE NO. | DWN | CHKD. | APP'D. | NO. DAY YR.
ORIGINAL ISSUE | SH | 4-17-92
CHYRON CORPORATION
5 Hub Drive
Melville, New York 11747
TITLE FRAME BUFFER FOR INFINIT!
(REV C ARTWORK)
SH 7 OF 15
DOCUMENT NUMBER 2A01548 REV G

MEMORY ADDRESS BUS DRIVERS

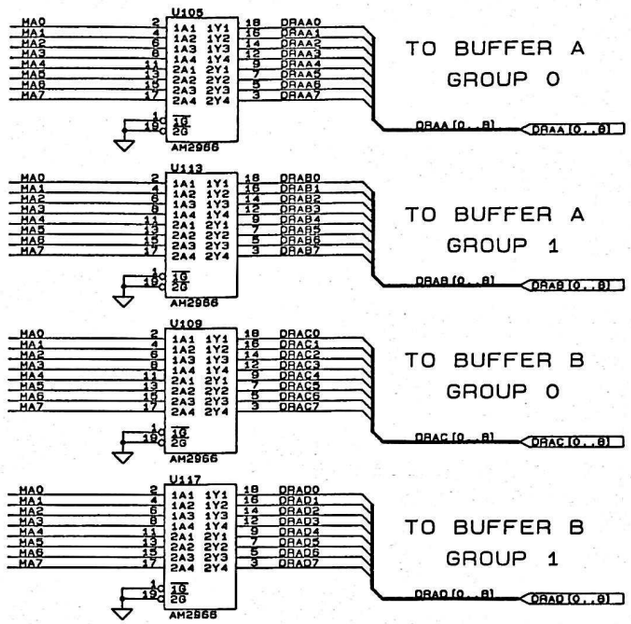

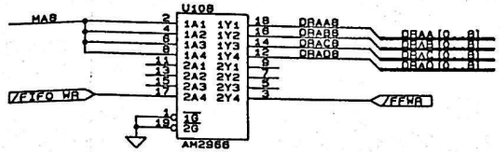

THESE "OR'S" MUST BE IN THE SAME IC PACKAGE

SAME GOES FOR 'F74

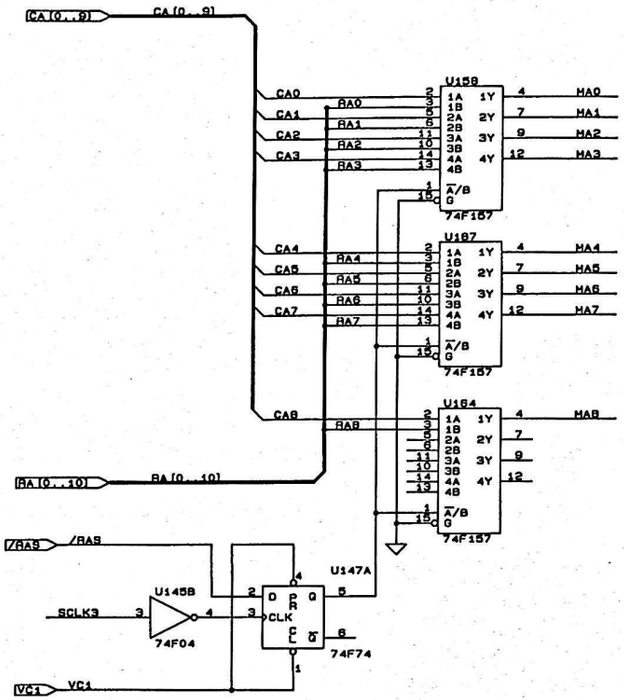

PIXEL CLOCK GENERATOR

PIXEL CLOCK MUST BE HIGH DURING ERASE.

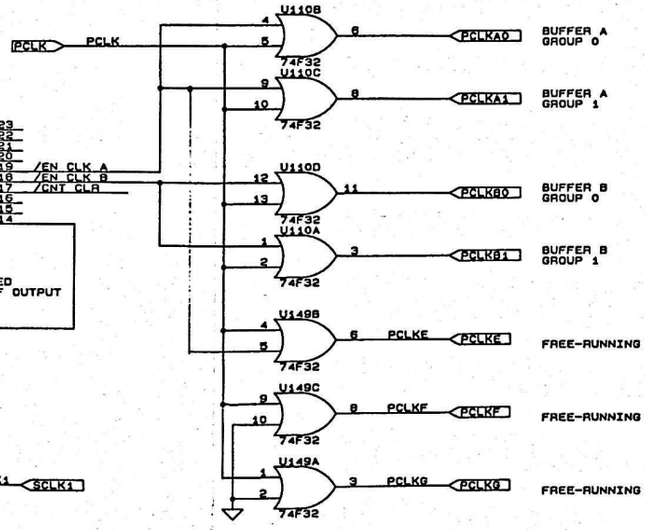

DRAM ADDRESS CONTROL PALS AND DRIVERS

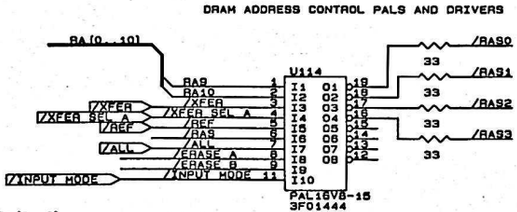

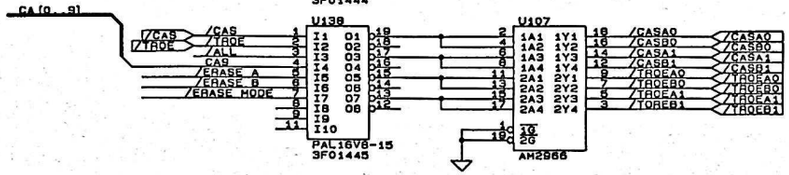

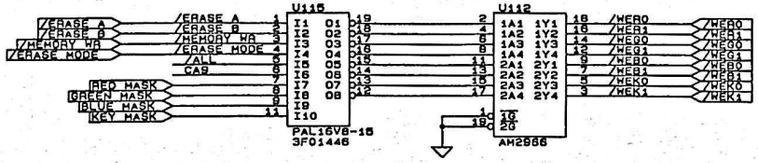

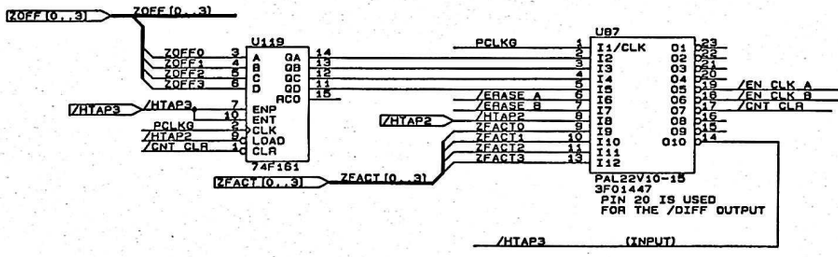

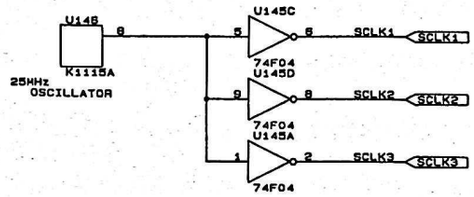

PROCESSOR CLOCK GENERATOR

ALL THREE INVERTERS MUST BE IN THE SAME PACKAGE!

REV.	ENGRG CHANGE NO.	DWN	CHKD.	APP'D.	MO. DAY YR.
ORIGINAL ISSUE		SH			09-27-91

CHYRON CORPORATION
5 Hub Drive
Melville, New York 11747

TITLE: FRAME BUFFER FOR INFINIT!
VRAM CONTROL SIGNAL DRIVERS
(REV C ARTWORK)

DOCUMENT NUMBER: 2A01548 REV G

SH 8 OF 15

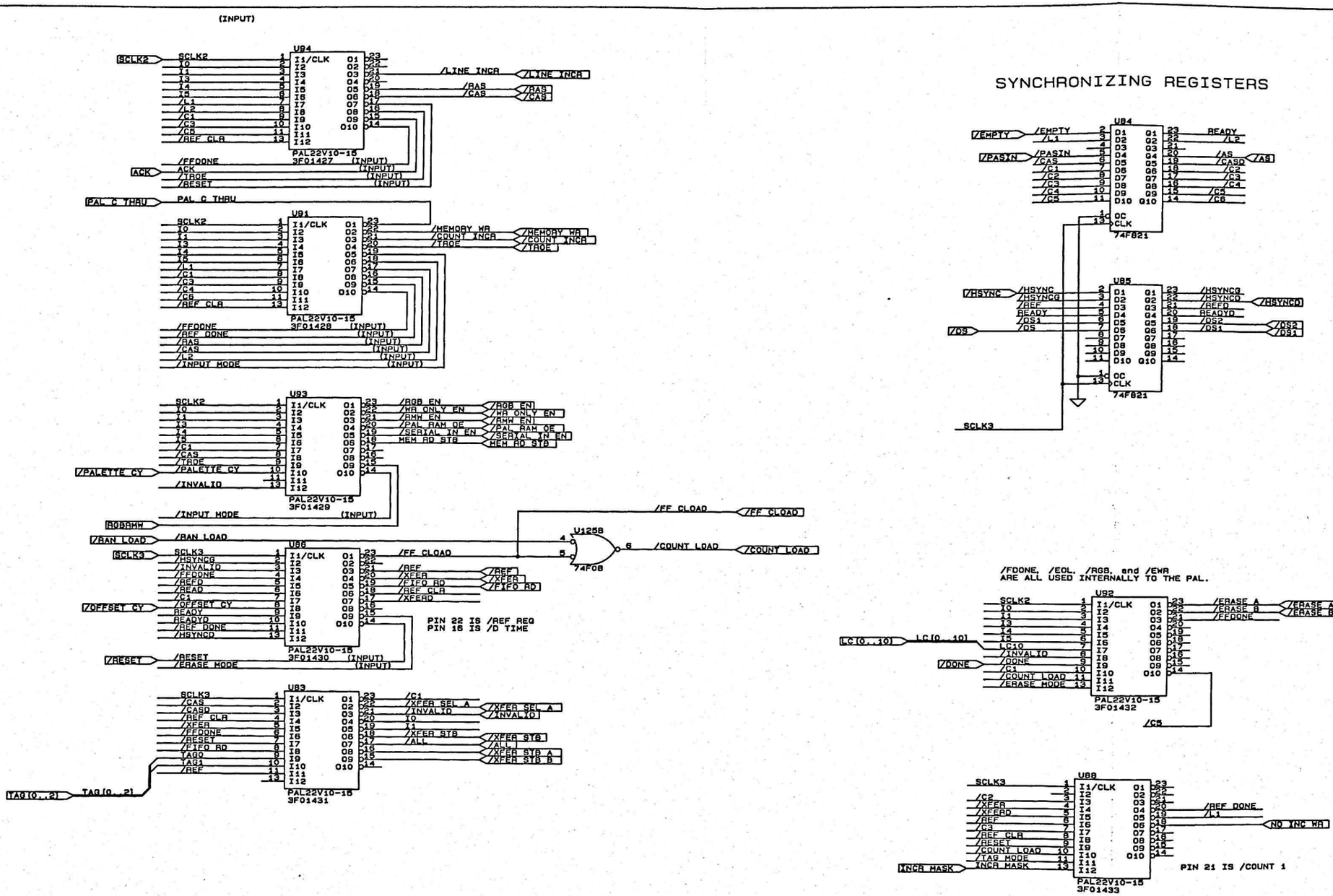

REV.	ENGRG CHANGE NO.	DWN	CHKD.	APP'D.	MO. DAY YR.
ORIGINAL ISSUE		SH			03-11-91

CHYRON CORPORATION
5 Hub Drive
Melville, New York 11747

TITLE: FRAME BUFFER FOR INFINIT!
PROCESSOR CONTROL
(REV C ARTWORK)

SH 9 OF 15

DOCUMENT NUMBER: 2A01548 REV G

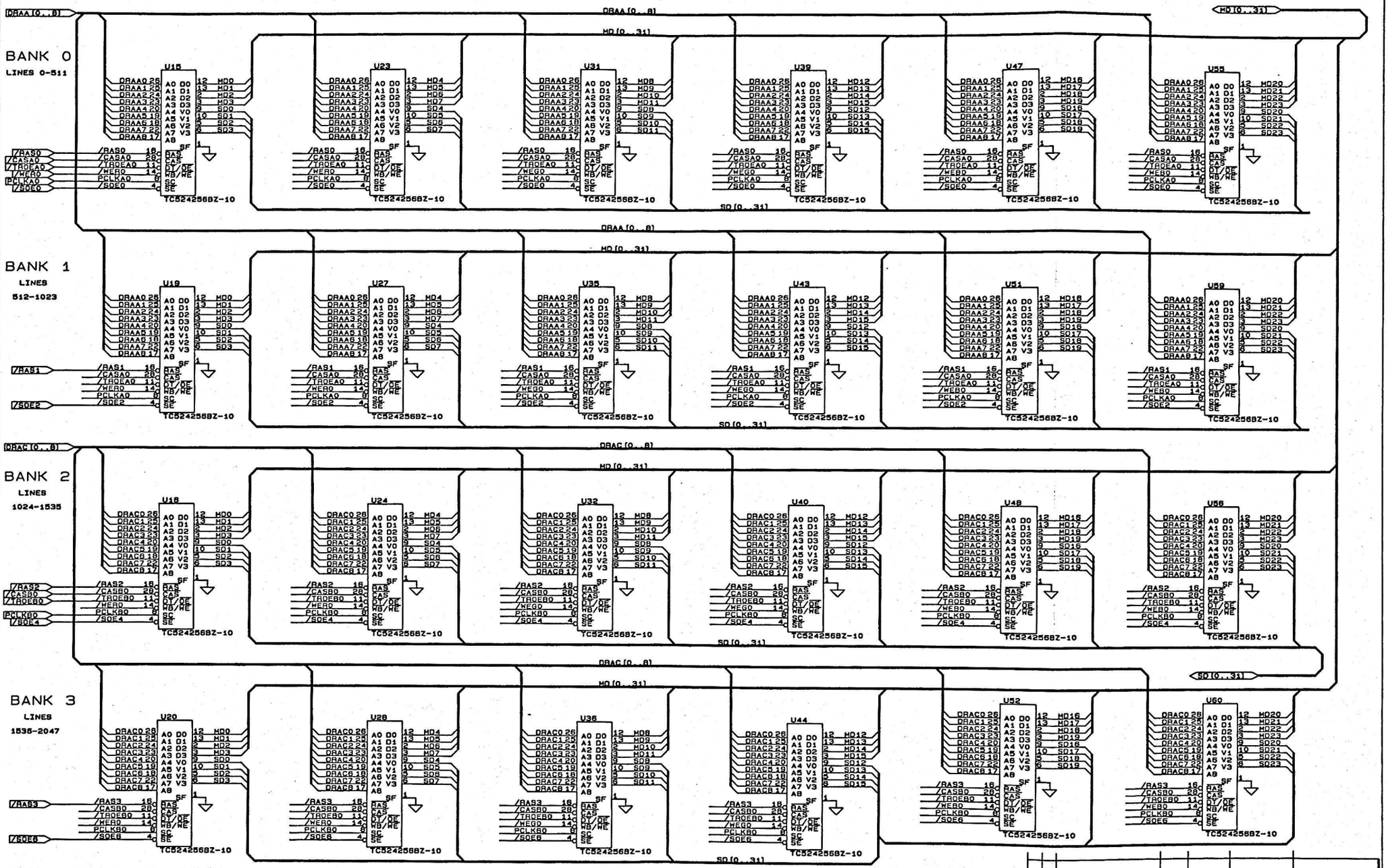

GROUP 0

PIXEL ADDRESSES 0 - 511

DATA BITS 0-23

REV.	ENGRG CHANGE NO.	DWN	CHKD.	APP'D.	MO. DAY YR.
ORIGINAL ISSUE		SH			09-27-91

CHYRON CORPORATION
5 Hub Drive
Melville, New York 11747

TITLE: FRAME BUFFER FOR INFINIT! VRAM BANKS 0-3, GROUP 0 (REV C ARTWORK)

DOCUMENT NUMBER: 2A01548 REV G

SH 10 OF 15

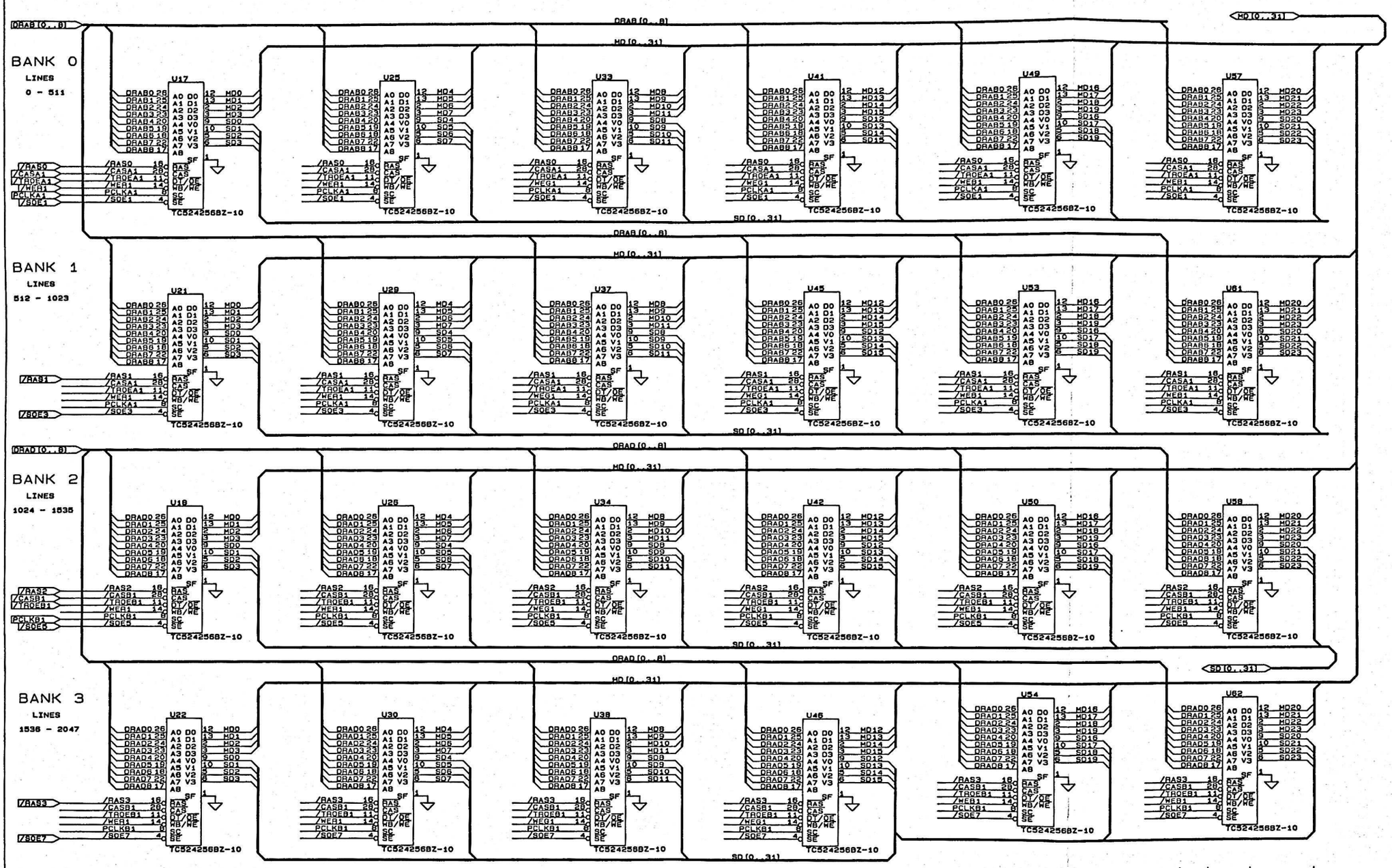

/WEG1 /WEB1

GROUP 1
PIXEL ADDRESSES 512 - 1023
DATA BITS 0-23

REV.	ENGRG CHANGE NO.	DWN	CHKD.	APP'D.	MO. DAY YR.
ORIGINAL ISSUE		SH			09-27-91

CHYRON CORPORATION
5 Hub Drive
Melville, New York 11747

TITLE: FRAME BUFFER FOR INFINIT!
VRAM BANKS 0-3, GROUP 1
(REV C ARTWORK)

SH 11 OF 15

DOCUMENT NUMBER: 2A01548 REV G

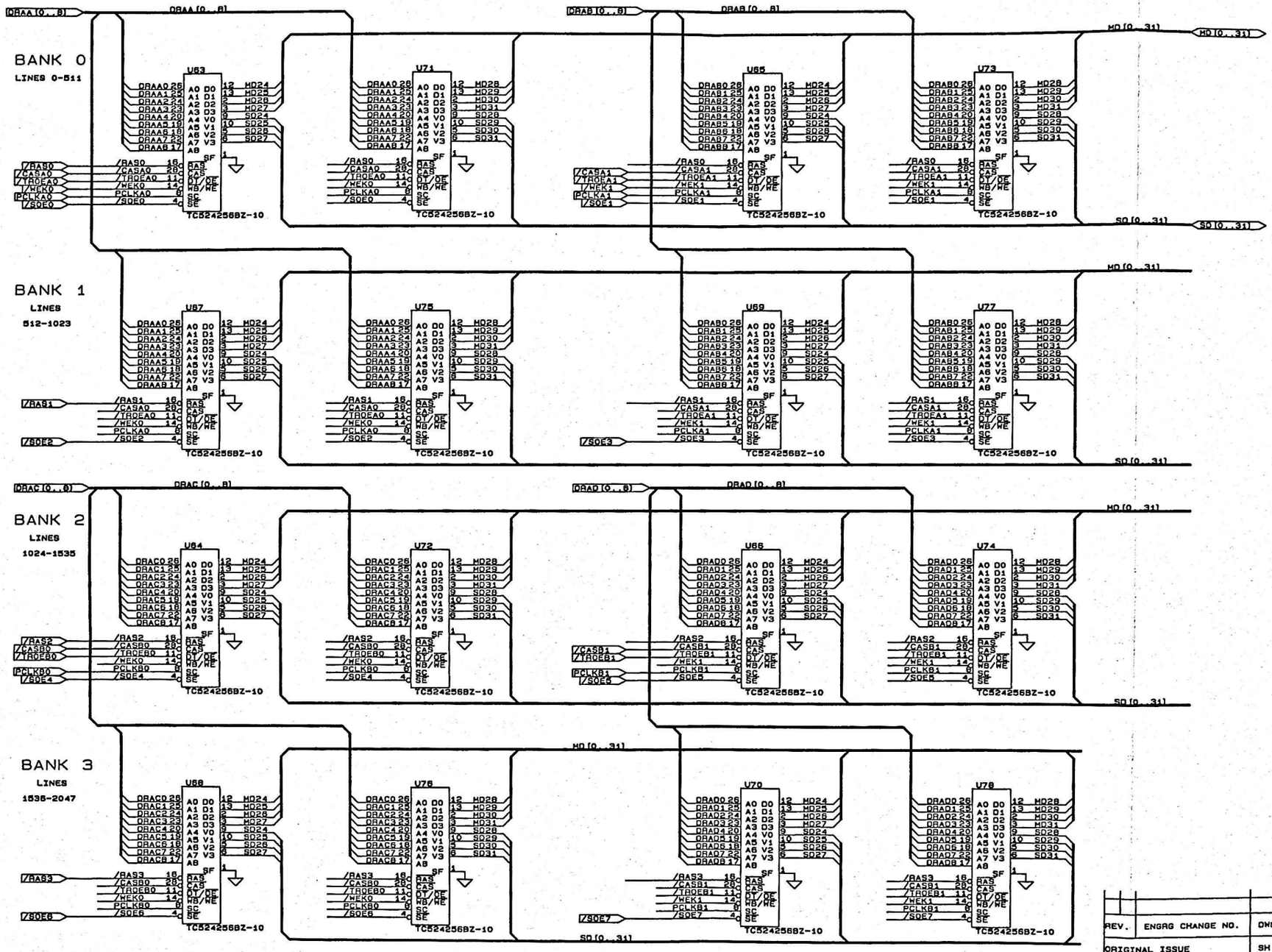

GROUP 0

PIXEL ADDRESSES 0 - 511

DATA BITS 24-31

GROUP 1

PIXEL ADDRESSES 512 - 1023

DATA BITS 24-31

REV.	ENGRG CHANGE NO.	DWN	CHKD.	APP'D.	MO. DAY YR.
ORIGINAL ISSUE		SH			09-27-91

CHYRON CORPORATION
5 Hub Drive
Melville, New York 11747

TITLE: FRAME BUFFER FOR INFINIT!
VRAM BITS 24 - 31
(REV C ARTWORK)

DOCUMENT NUMBER: 2A01548 REV G

SH. 12 OF 15

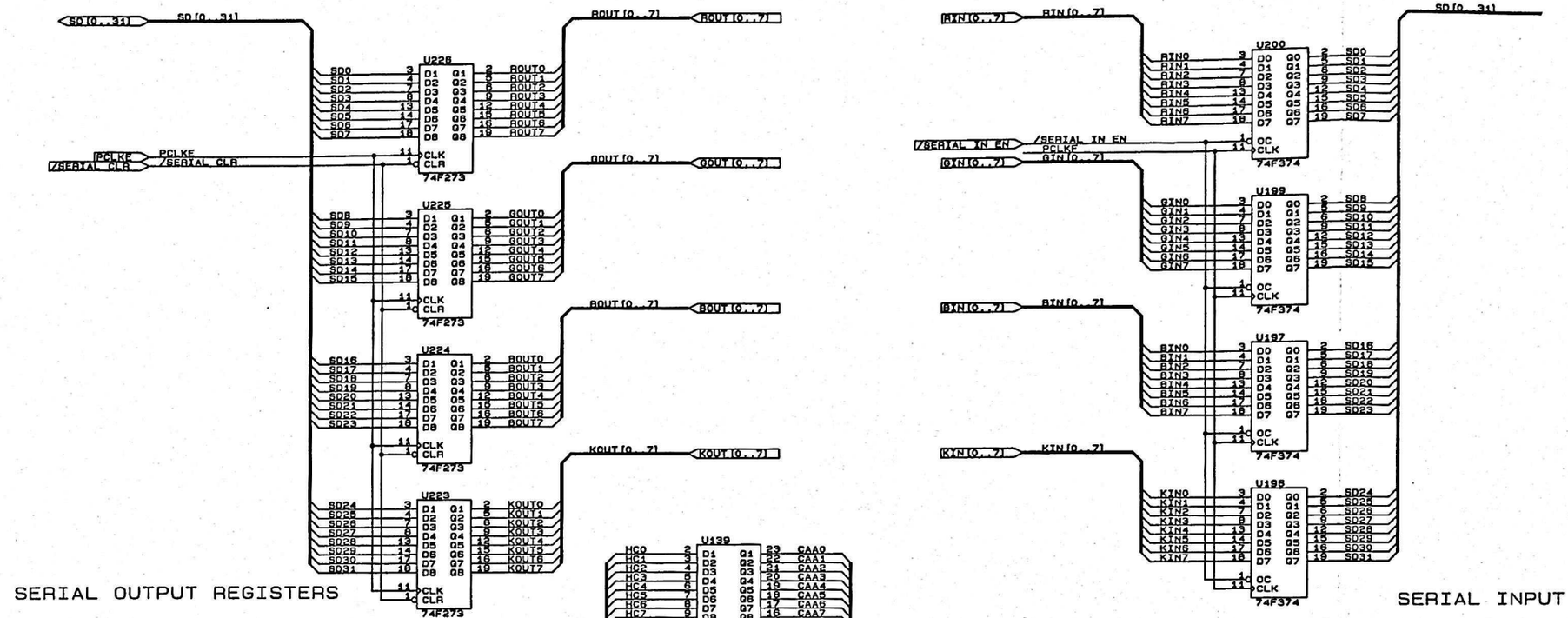

REV.	ENGRG CHANGE NO.	DWN	CHKD.	APP'D.	MO. DAY YR.
ORIGINAL ISSUE		SH			03-11-91

CHYRON CORPORATION
5 Hub Drive
Melville, New York 11747

TITLE: FRAME BUFFER FOR INFINIT! VRAM I/O REG'S & CELL RAM (REV C ARTWORK)

DOCUMENT NUMBER: 2A01548 REV G

SH. 13 OF 15

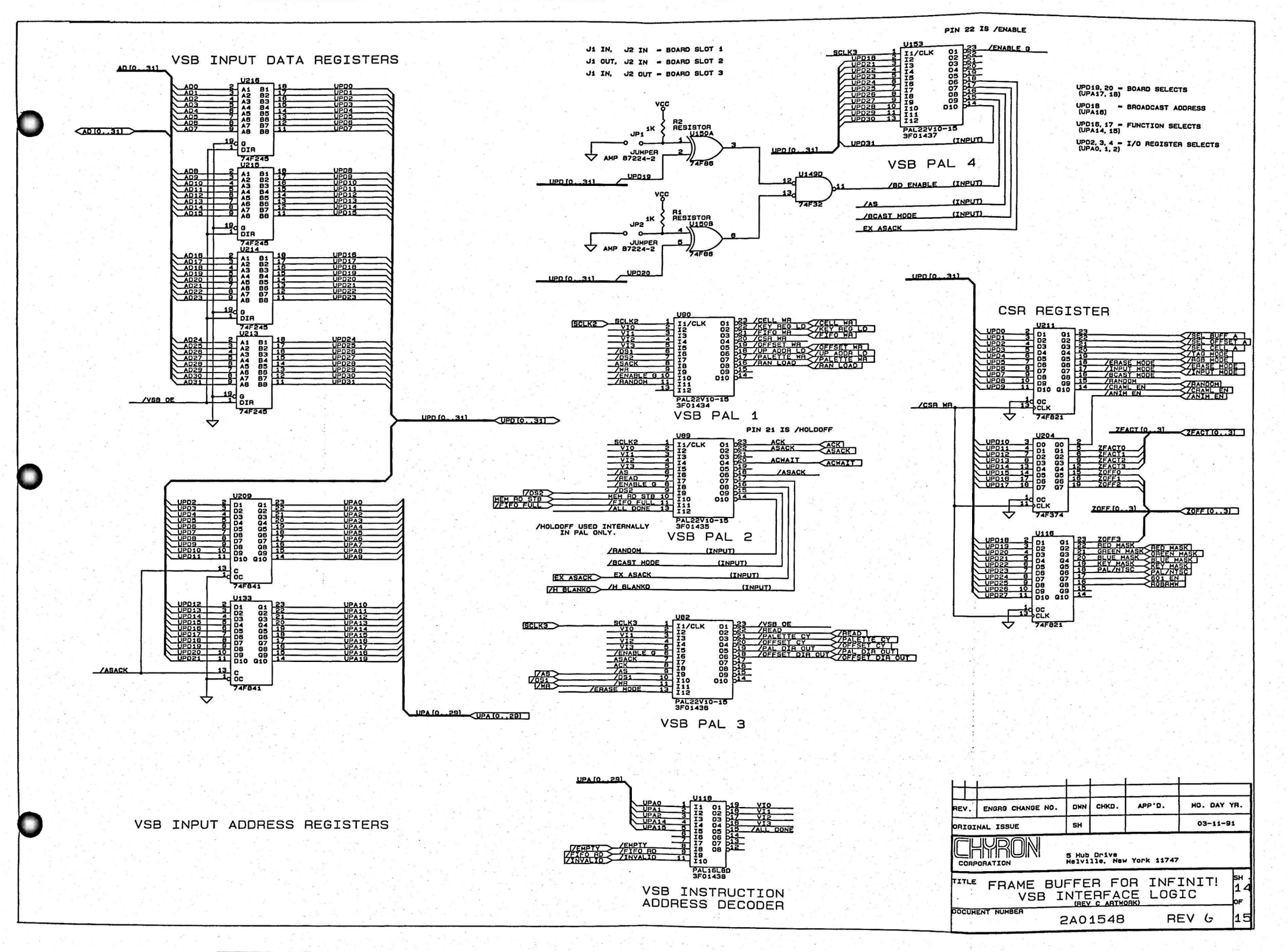

REV.	ENGRG CHANGE NO.	DWN	CHKD.	APP'D.	MO. DAY YR.
ORIGINAL ISSUE		SH			03-11-91

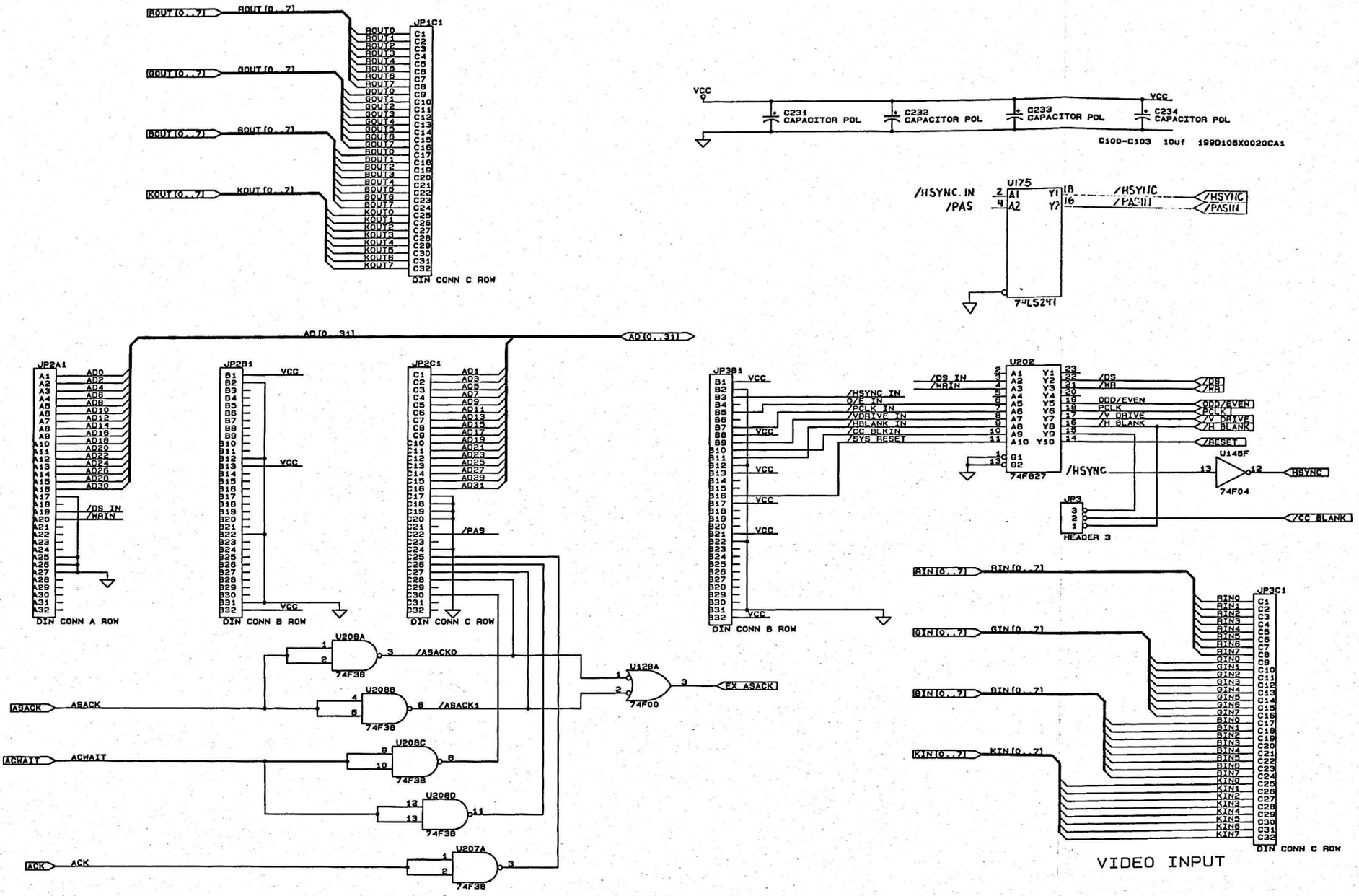

REV.	ENGRG CHANGE NO.	DWN	CHKD.	APP'D.	MO. DAY YR.
ORIGINAL ISSUE		SH			03-11-91

CHYRON CORPORATION
5 Hub Drive
Melville, New York 11747

TITLE: FRAME BUFFER FOR INFINIT!
DIN CONNECTORS ET AL
(REV C ARTWORK)

SH. 15 OF 15

DOCUMENT NUMBER: 2A01548 REV G

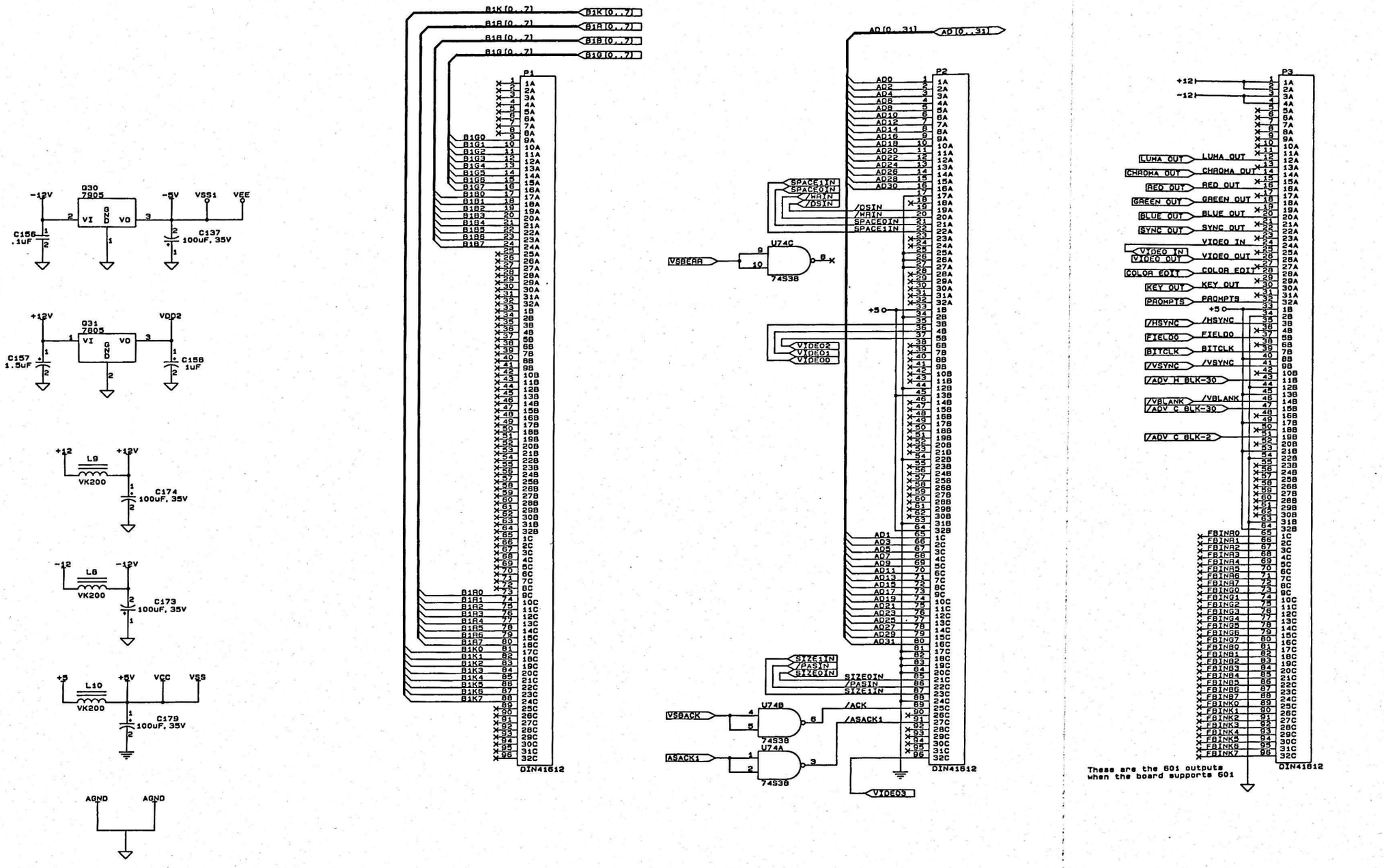

REV.	ENGRG CHANGE NO.	DWN	CHKD.	APP'D.	MO. DAY YR.
ORIGINAL ISSUE		TT			09-02-92

CHYRON CORPORATION
5 Hub Drive
Melville, New York 11747

TITLE: MAXINE VIDEO BOARD EDGE CONNECTORS

SH. 1 OF 17

DOCUMENT NUMBER: 2A01707 REV G

SYNC STRIPPER

INPUT BUFFER

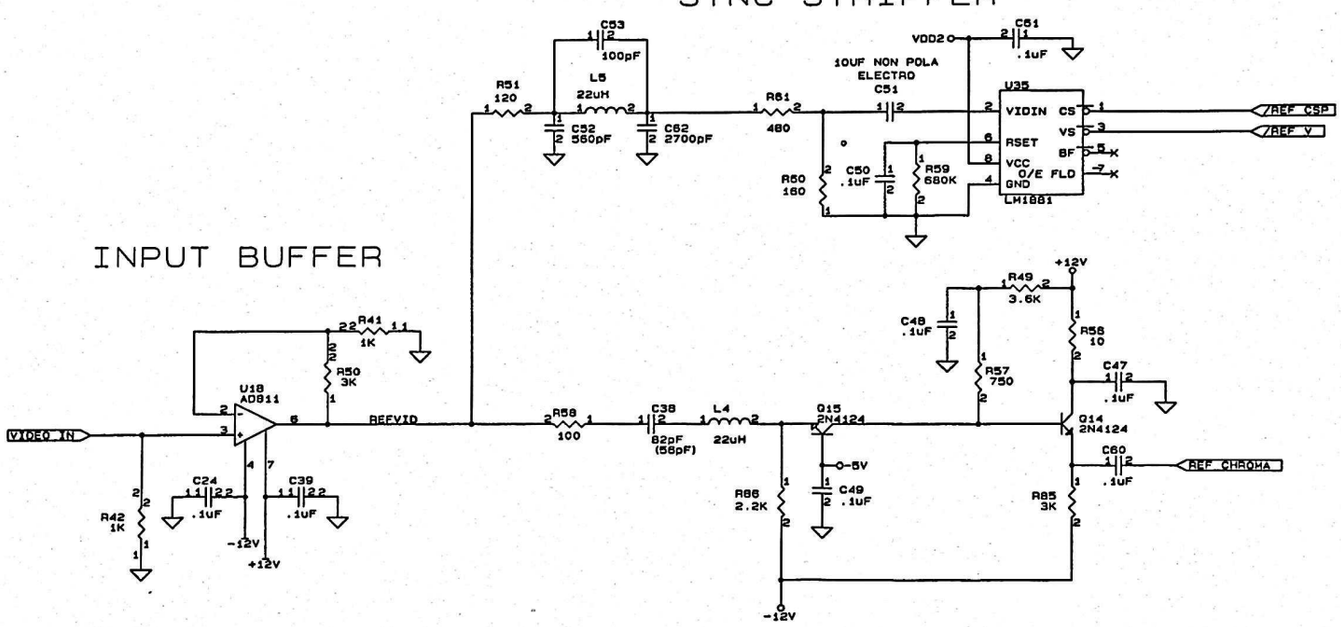

REV.	ENGRG CHANGE NO.	DWN	CHKD.	APP'D.	MO. DAY YR.
ORIGINAL ISSUE		TT			09-02-92

CHYRON CORPORATION
5 Hub Drive
Melville, New York 11747

TITLE
MAXINE VIDEO BOARD
VIDEO IN BUFFER/SYNC STRIPPER

SH. 2

DOCUMENT NUMBER
2A01707 REV G

OF 17

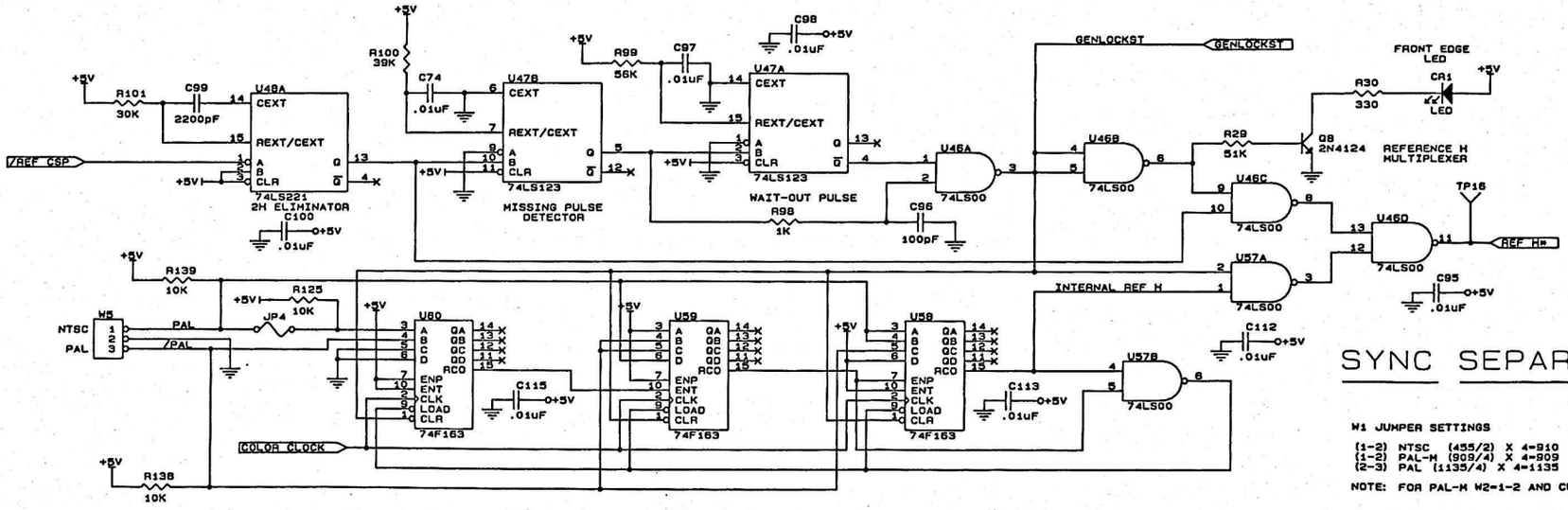

SYNC SEPARATOR

W1 JUMPER SETTINGS

(1-2) NTSC (455/2) X 4=910	4096-910=3186=C72
(1-2) PAL-M (909/4) X 4=909	4096-909=3187=C73
(2-3) PAL (1135/4) X 4=1135	4096-1135=2961=B91

NOTE: FOR PAL-M W2=1-2 AND CUT JP-5.

REV.	ENGRG CHANGE NO.	DWN	CHKD.	APP'D.	MO. DAY YR.
ORIGINAL ISSUE		TT			03-11-92

CHYRON CORPORATION
5 Hub Drive
Melville, New York 11747

TITLE: MAXINE VIDEO BOARD
SYNC SEPERATOR

SH. 3

DOCUMENT NUMBER: 2A01707 REV G

OF 17

BIT CLOCK PLL

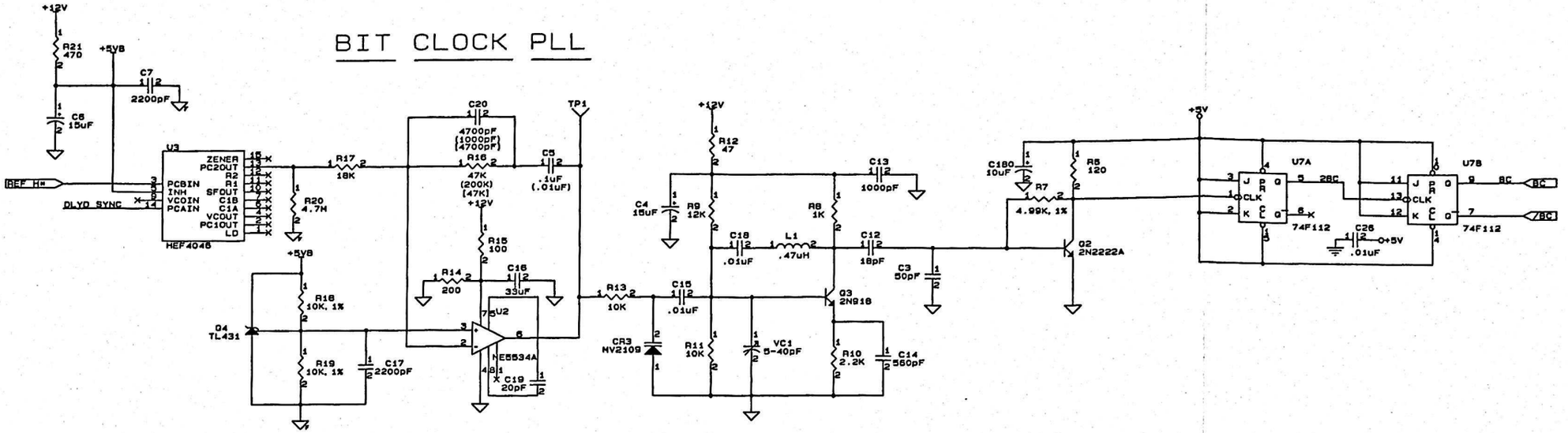

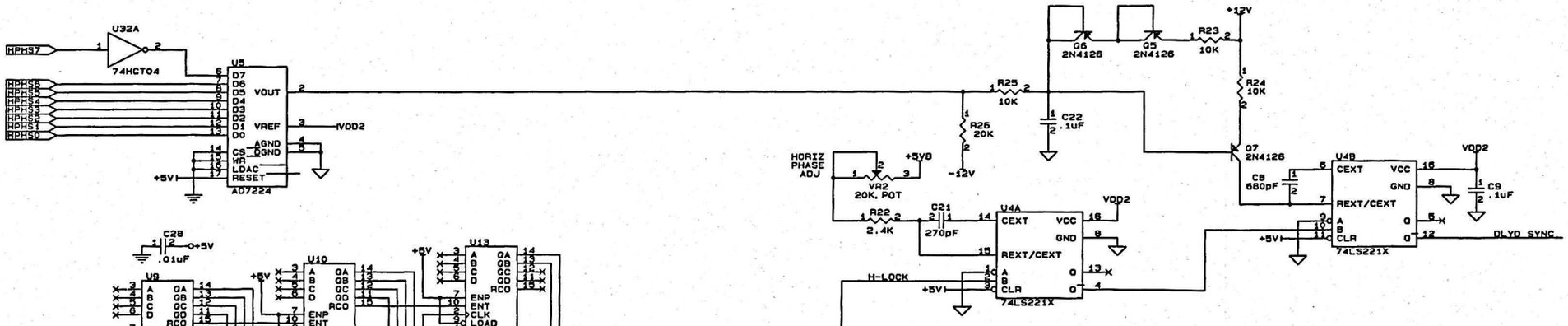

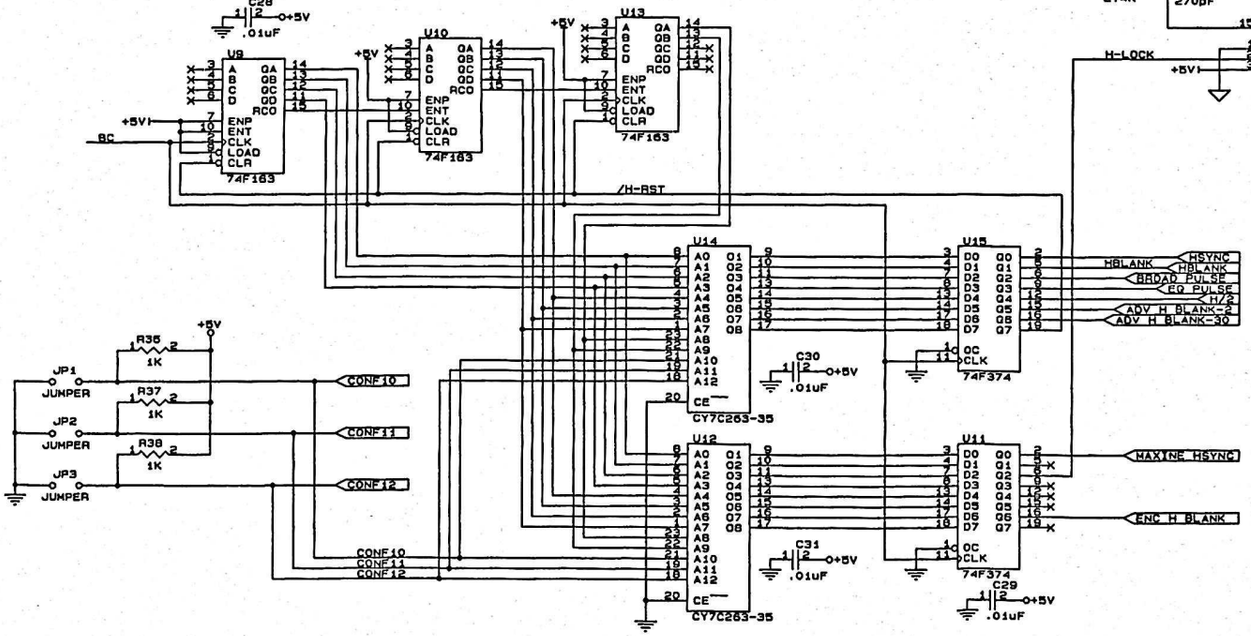

8K x 8 EPROM
ORCAD PART IS A "78641"

NB: Values in () are PAL values.
Values in [] are 13.5MHz values.

HORIZONTAL COUNTER & PROM

REV.	ENGRG CHANGE NO.	DWN	CHKD.	APP'D.	NO. DAY YR.
ORIGINAL ISSUE		TT			03-11-92

CHYRON CORPORATION
5 Hub Drive
Melville, New York 11747

TITLE	MAXINE VIDEO BOARD BITCLK PLL/H TIMING	SH. 4
DOCUMENT NUMBER	2A01707 REV G	OF 17

VERTICAL COUNTER & PROM

COMPOSITE LOGIC

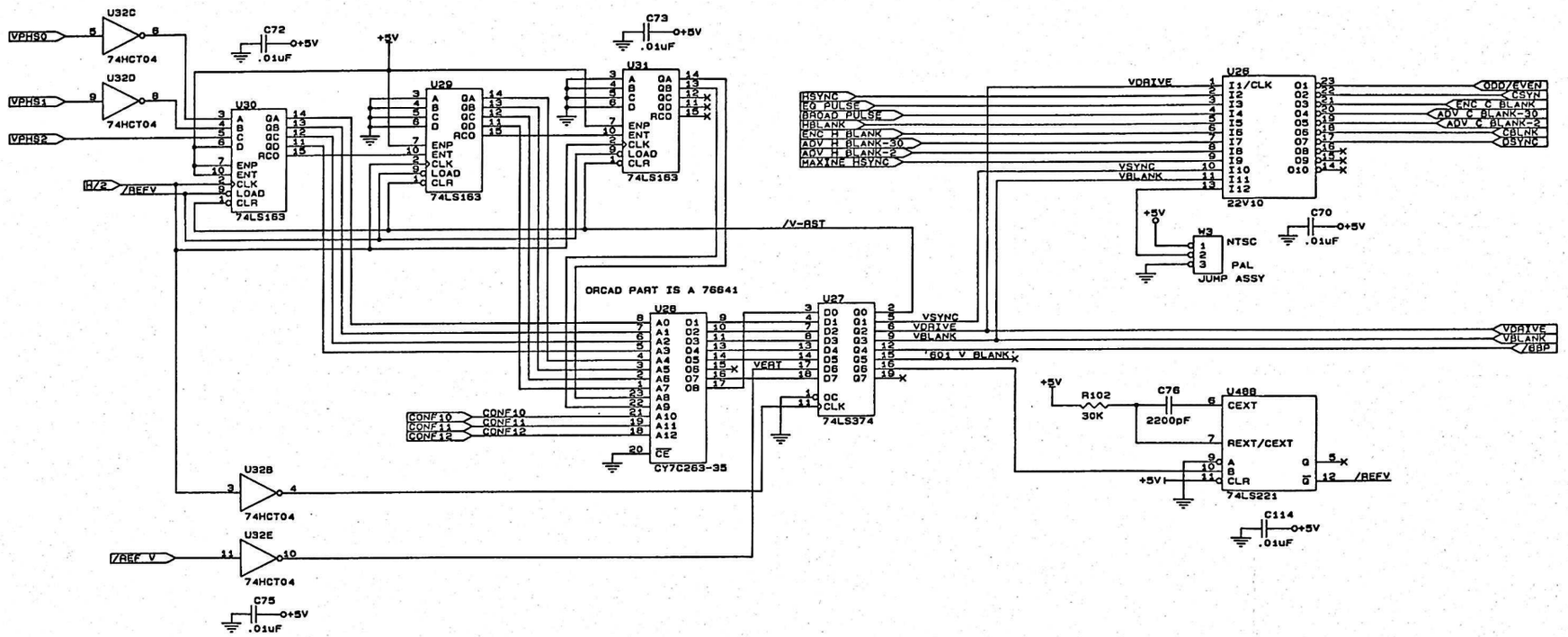

REV.	ENGRG CHANGE NO.	DWN	CHKD.	APP'D.	MO. DAY YR.
ORIGINAL ISSUE		TT			03-11-92

CHYRON CORPORATION
5 Hub Drive
Melville, New York 11747

TITLE
MAXINE VIDEO BOARD
VERT TIMING & COMPOSITE LOGIC

SH. 5 OF 17

DOCUMENT NUMBER
2A01707 REV G

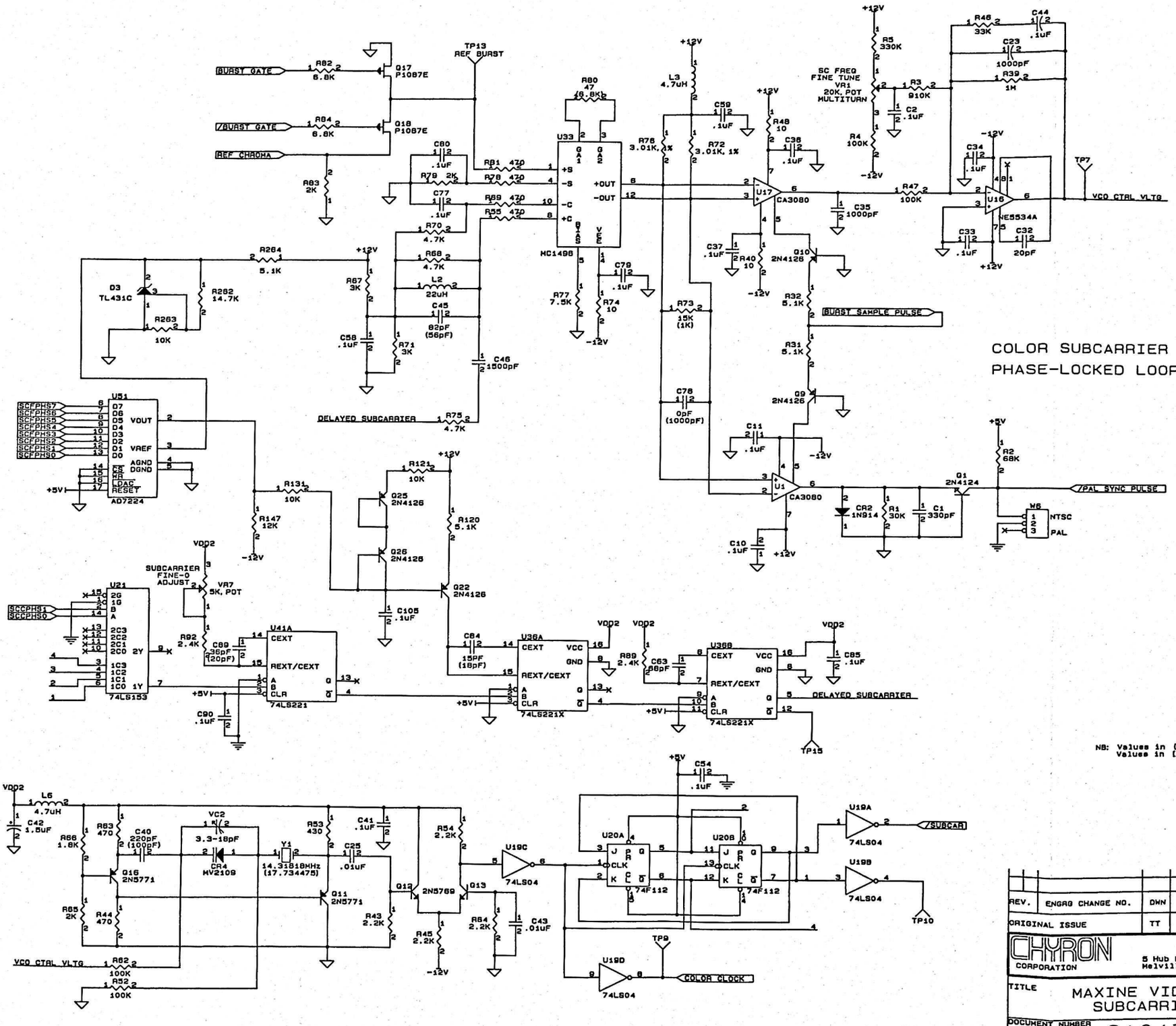

REV.	ENGRG CHANGE NO.	DWN	CHKD.	APP'D.	MO. DAY YR.
ORIGINAL ISSUE		TT			09-02-92

CHYRON CORPORATION
5 Hub Drive
Melville, New York 11747

TITLE: MAXINE VIDEO BOARD
SUBCARRIER PLL

SH. 6 OF 17

DOCUMENT NUMBER: 2A01707 REV G

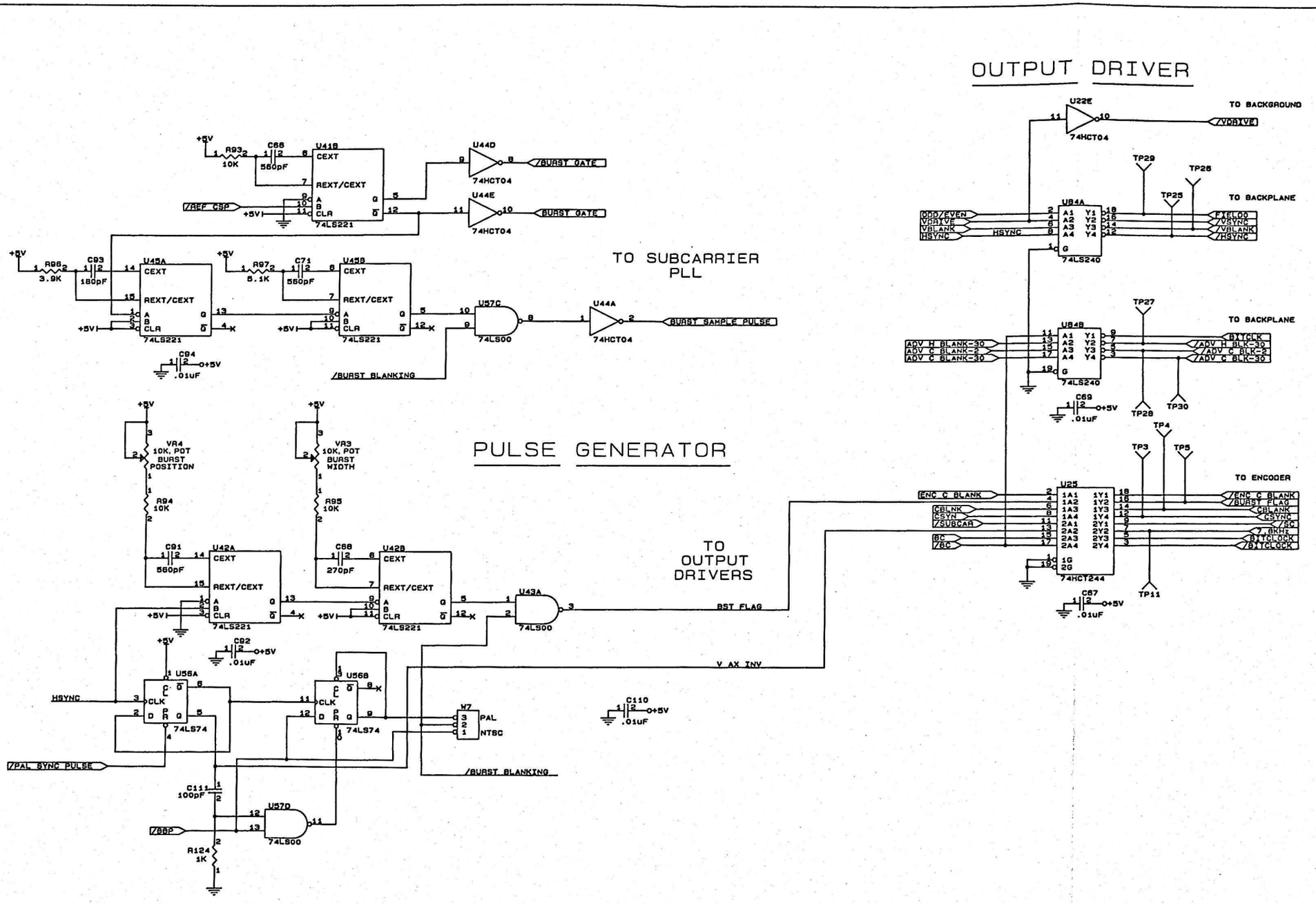

REV.	ENGRG CHANGE NO.	DWN	CHKD.	APP'D.	MO. DAY YR.
ORIGINAL ISSUE		TT			03-11-92

CHYRON CORPORATION
5 Hub Drive
Melville, New York 11747

TITLE: MAXINE VIDEO BOARD
PULSE GEN/OUTPUT DRIVERS

SH. 7 OF 17

DOCUMENT NUMBER: 2A01707 REV G

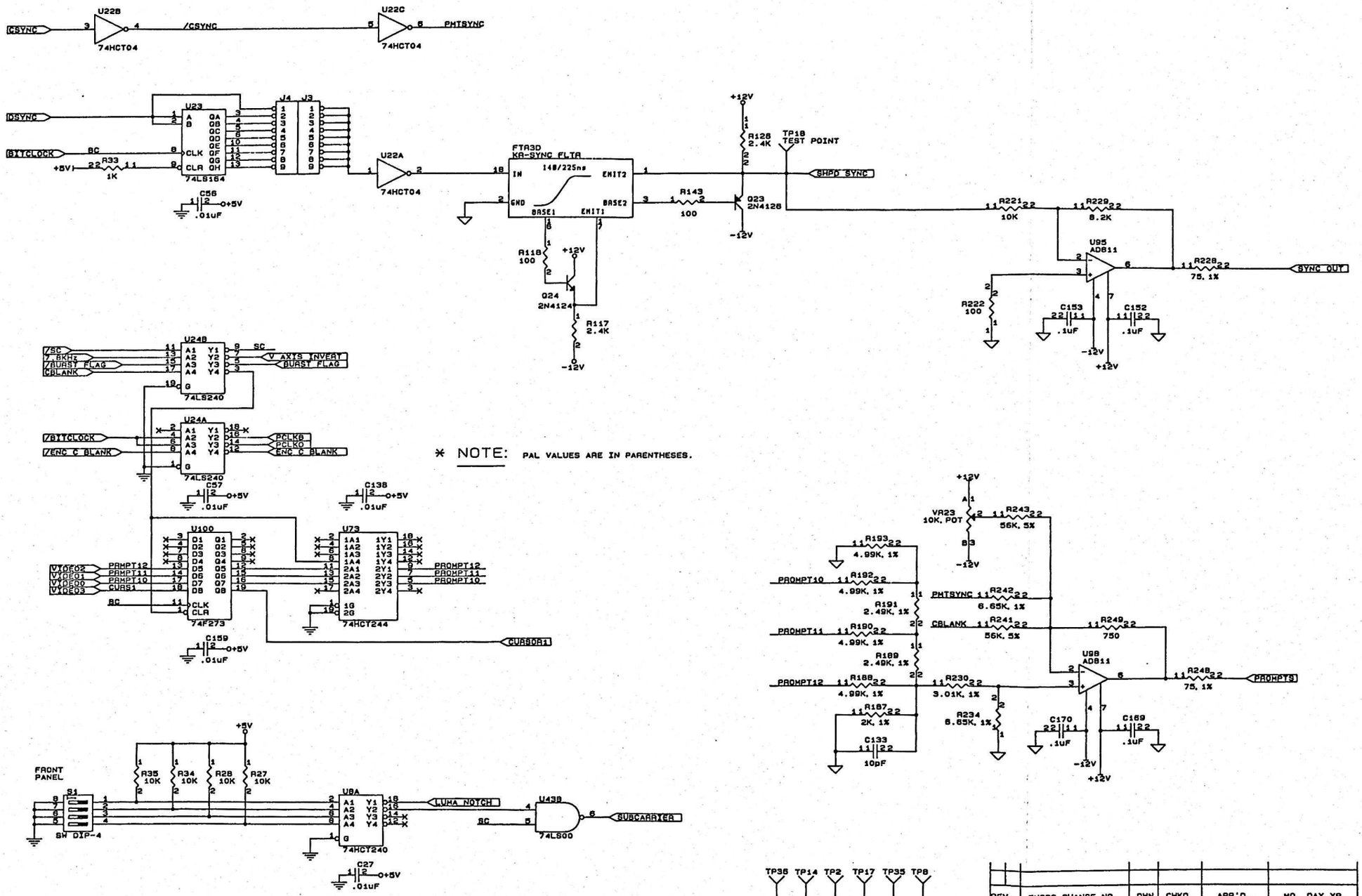

REV.	ENGRG CHANGE NO.	DWN	CHKD.	APP'D.	MO. DAY YR.
ORIGINAL ISSUE		TT			03-11-92

CHYRON CORPORATION
5 Hub Drive
Melville, New York 11747

TITLE: MAXINE VIDEO BOARD
SYNC & PROMPT GENERATOR

SH. 8 OF 17

DOCUMENT NUMBER: 2A01707 REV G

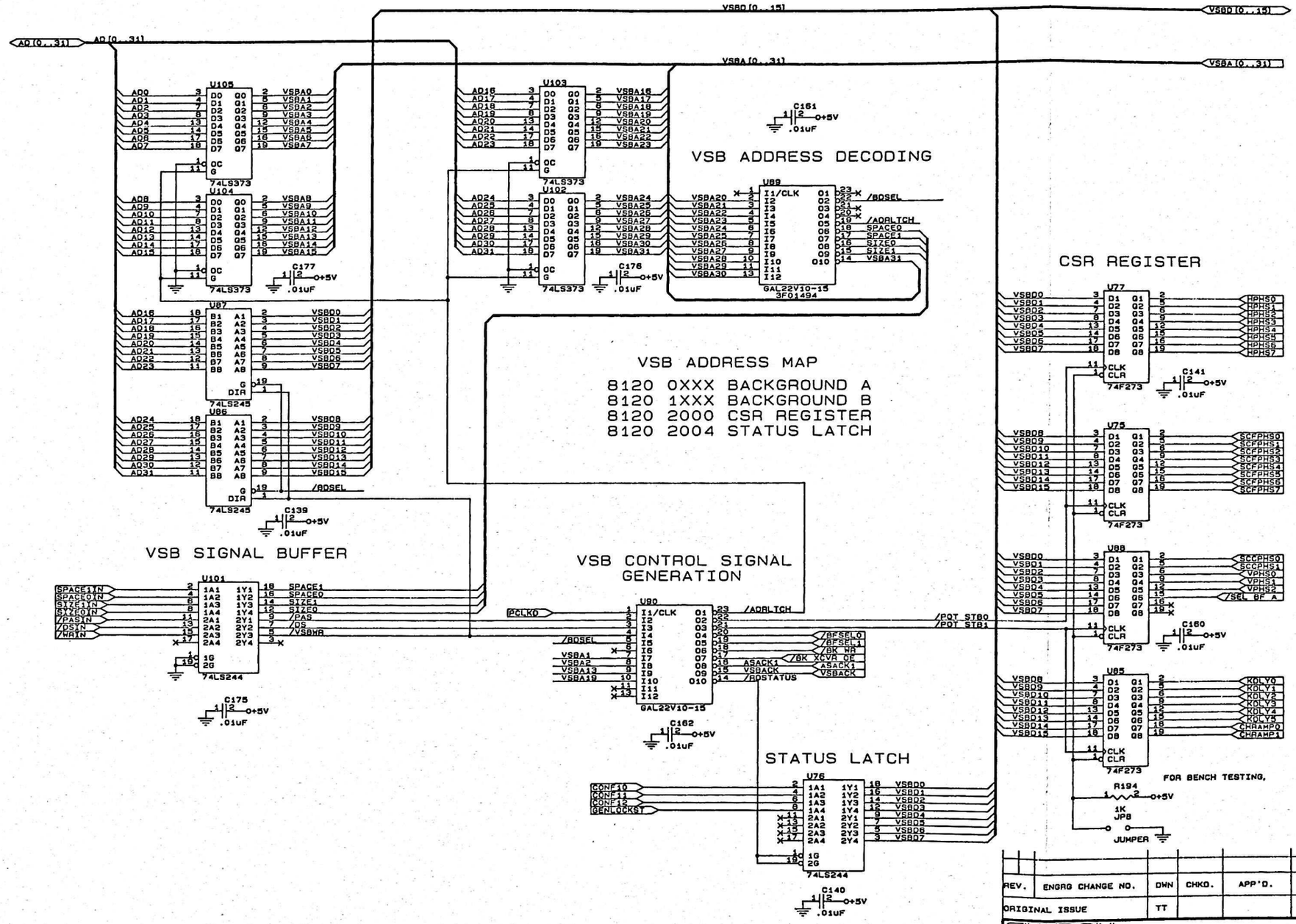
VSB BUS ADDRESS/DATA BUFFERS
VSB ADDRESS LATCHES
VSB ADDRESS DECODING
CSR REGISTER
VSB ADDRESS MAP
8120 0XXX BACKGROUND A
8120 1XXX BACKGROUND B
8120 2000 CSR REGISTER
8120 2004 STATUS LATCH
VSB SIGNAL BUFFER
VSB CONTROL SIGNAL GENERATION
STATUS LATCH
FOR BENCH TESTING,
JUMPER
REV. ENGRG CHANGE NO. DWN CHKD. APP'D. MO. DAY YR.
ORIGINAL ISSUE TT 03-11-92
CHYRON CORPORATION
5 Hub Drive Melville, New York 11747
TITLE MAXINE VIDEO BOARD VSB INTERFACE
SH. 9
DOCUMENT NUMBER 2A01707 REV G
OF 17

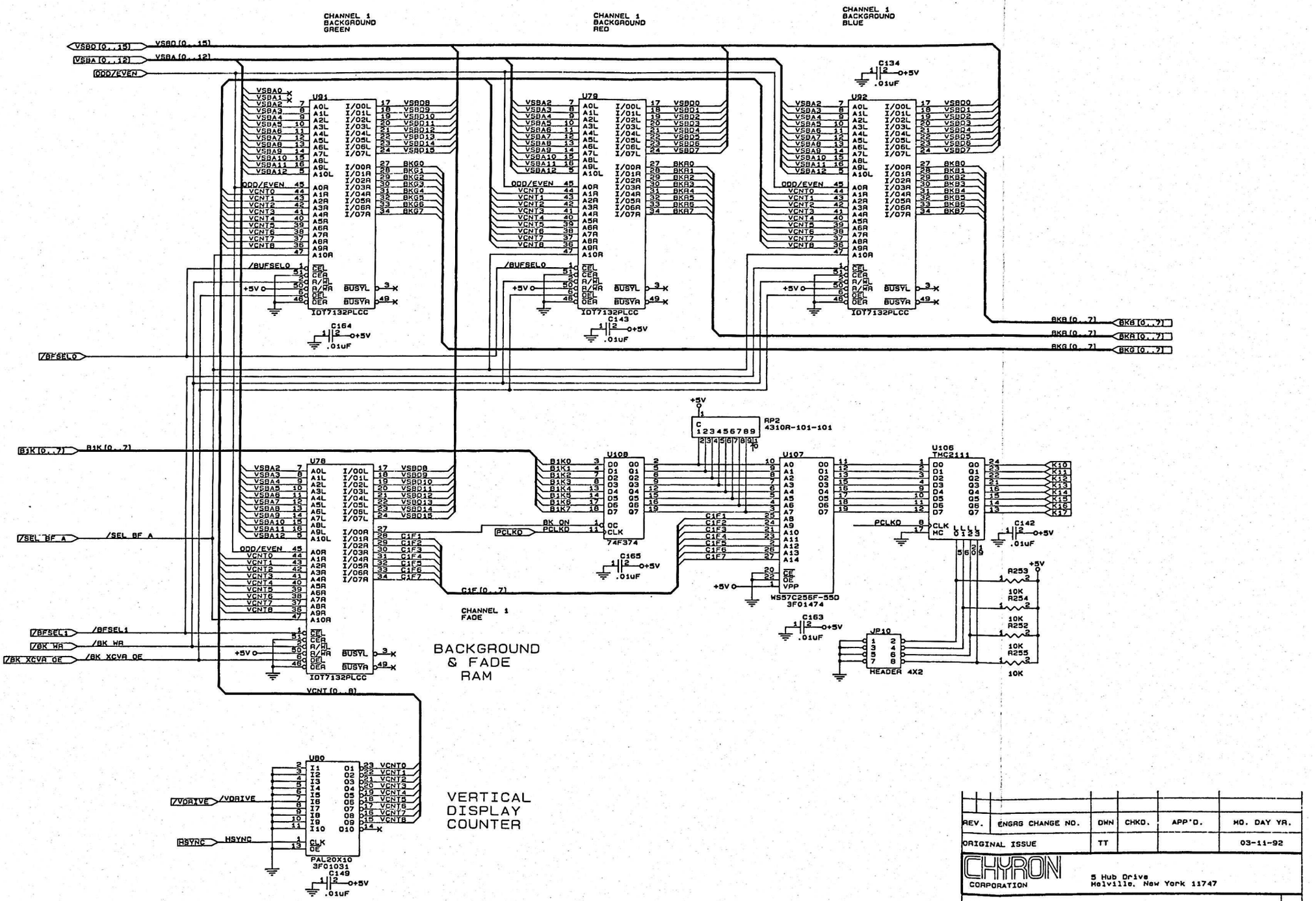

REV.	ENGRG CHANGE NO.	DWN	CHKD.	APP'D.	MO. DAY YR.
ORIGINAL ISSUE		TT			03-11-92

CHYRON CORPORATION
5 Hub Drive
Melville, New York 11747

TITLE: MAXINE VIDEO BOARD BACKGROUND & FADE TABLES

SH. 10 OF 17

DOCUMENT NUMBER: 2A01707 REV G

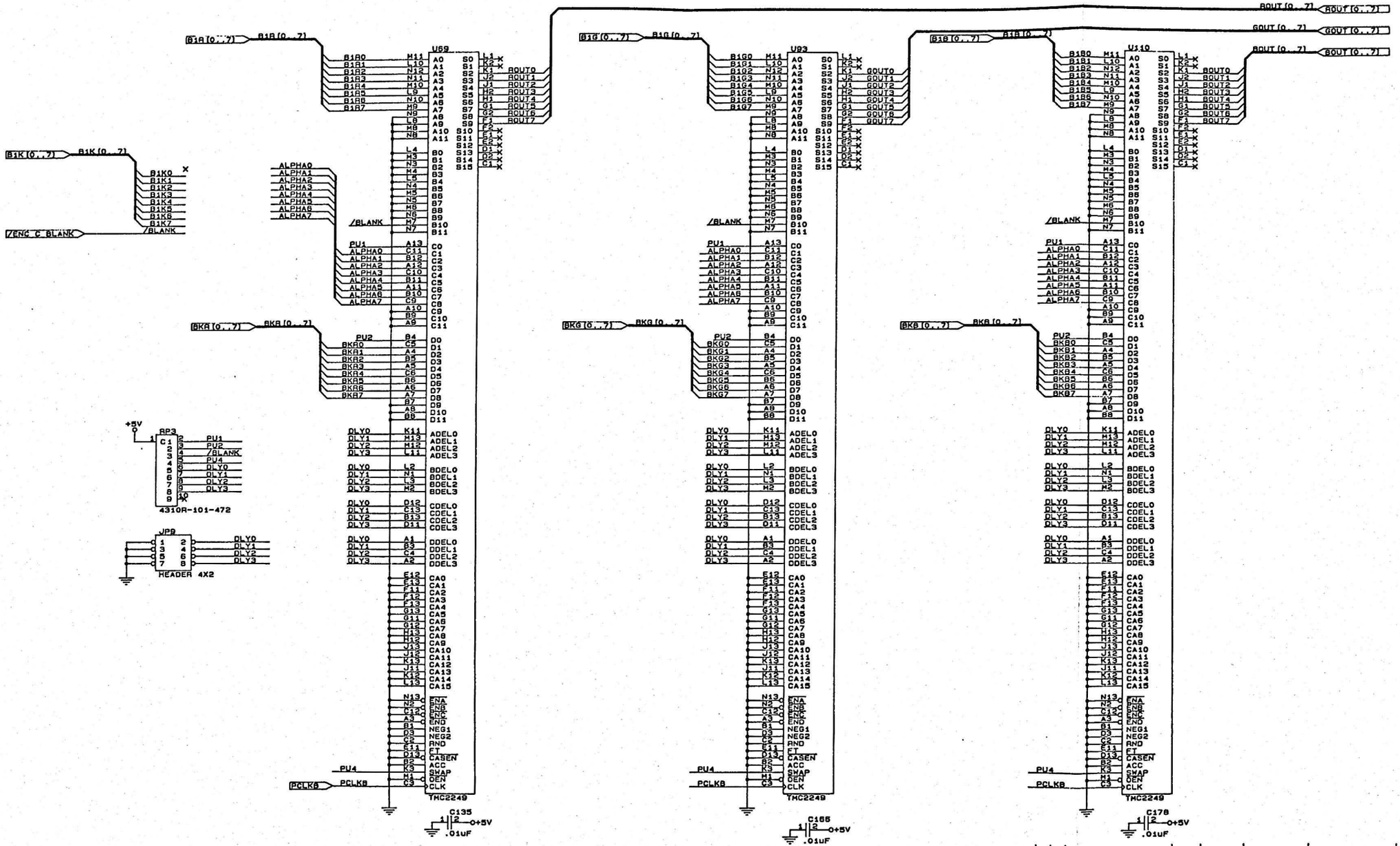

REV.	ENGRG CHANGE NO.	DWN	CHKD.	APP'D.	MO. DAY YR.
ORIGINAL ISSUE		TT			03-11-92

CHYRON CORPORATION
5 Hub Drive
Melville, New York 11747

TITLE: MAXINE VIDEO BOARD
COLOR MIXING LOGIC

SH. 11 OF 17

DOCUMENT NUMBER: 2A01707 REV G

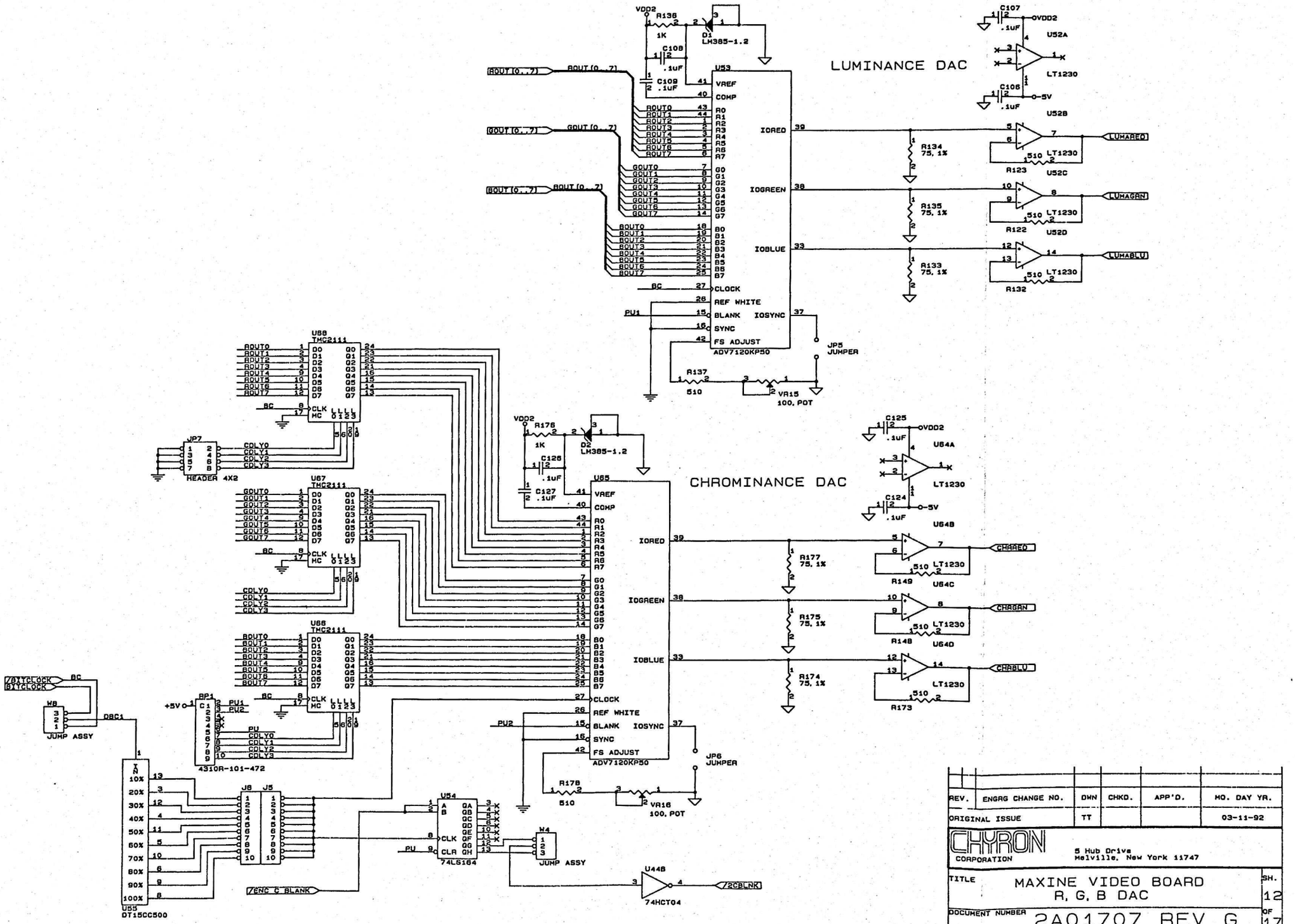

REV.	ENGRG CHANGE NO.	DWN	CHKD.	APP'D.	MO. DAY YR.
ORIGINAL ISSUE		TT			03-11-92

CHYRON CORPORATION
5 Hub Drive
Melville, New York 11747

TITLE: MAXINE VIDEO BOARD
R, G, B DAC

SH. 12 OF 17

DOCUMENT NUMBER: 2A01707 REV G

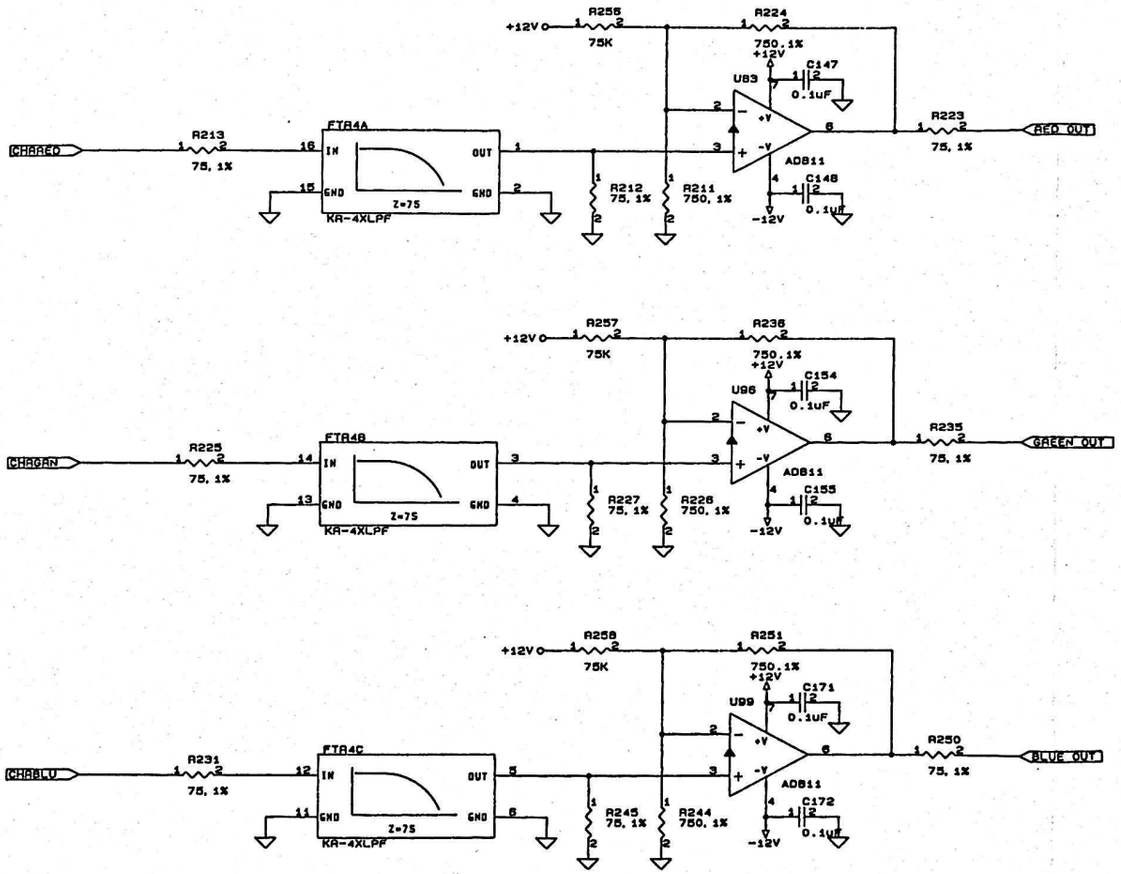

REV.	ENGRG CHANGE NO.	DWN	CHKD.	APP'D.	MO. DAY YR.
ORIGINAL ISSUE		TT			10-2-92

CHYRON CORPORATION
6 Hub Drive
Melville, New York 11747

TITLE: MAXINE VIDEO BOARD
COMPONENT VIDEO OUT

SH. 13 OF 17

DOCUMENT NUMBER 2A01707 REV G

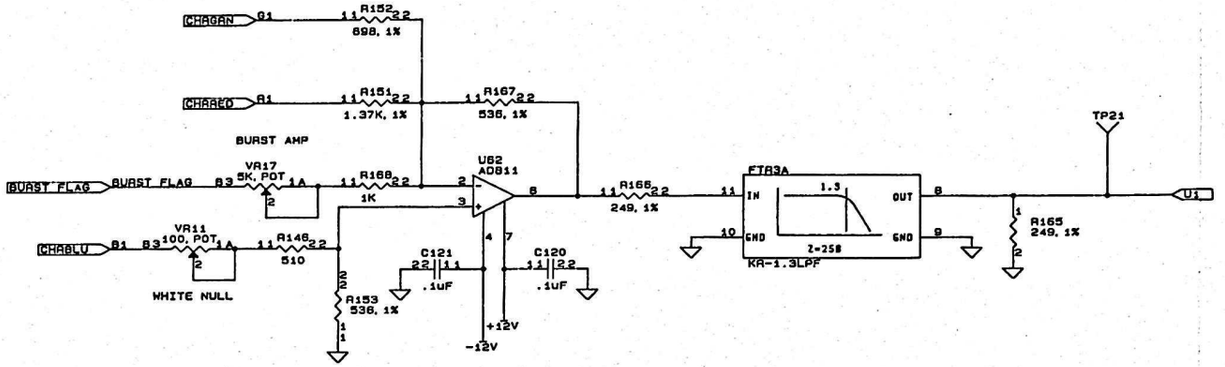

CHROMA MATRICES

5U= -.735R - 1.445G + 2.185B

5V= 3.075R - 2.575G - .500B

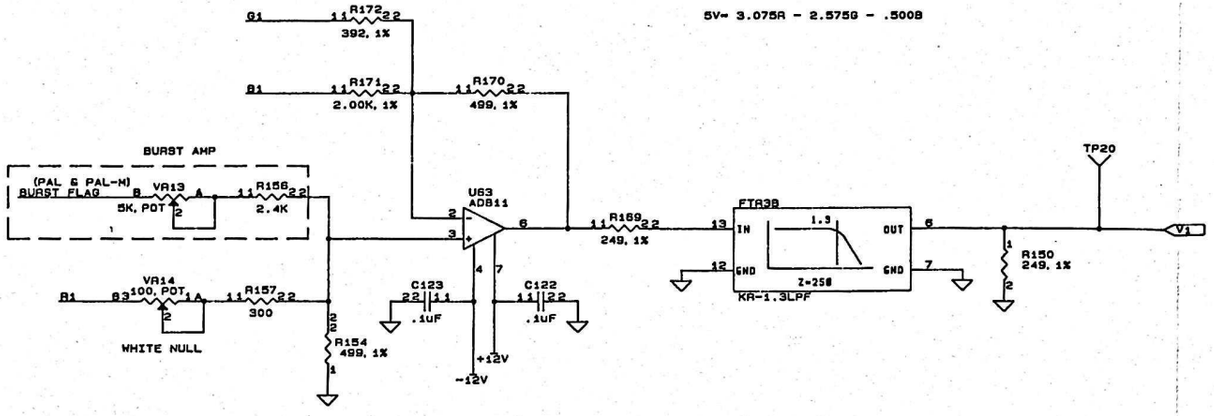

REV.	ENGRG CHANGE NO.	DWN	CHKD.	APP'D.	MO. DAY YR.
ORIGINAL ISSUE		TT			09-02-92

CHYRON CORPORATION
5 Hub Drive
Melville, New York 11747

TITLE: MAXINE VIDEO BOARD
U/V MATRIX

SH. 14 OF 17

DOCUMENT NUMBER 2A01707 REV G

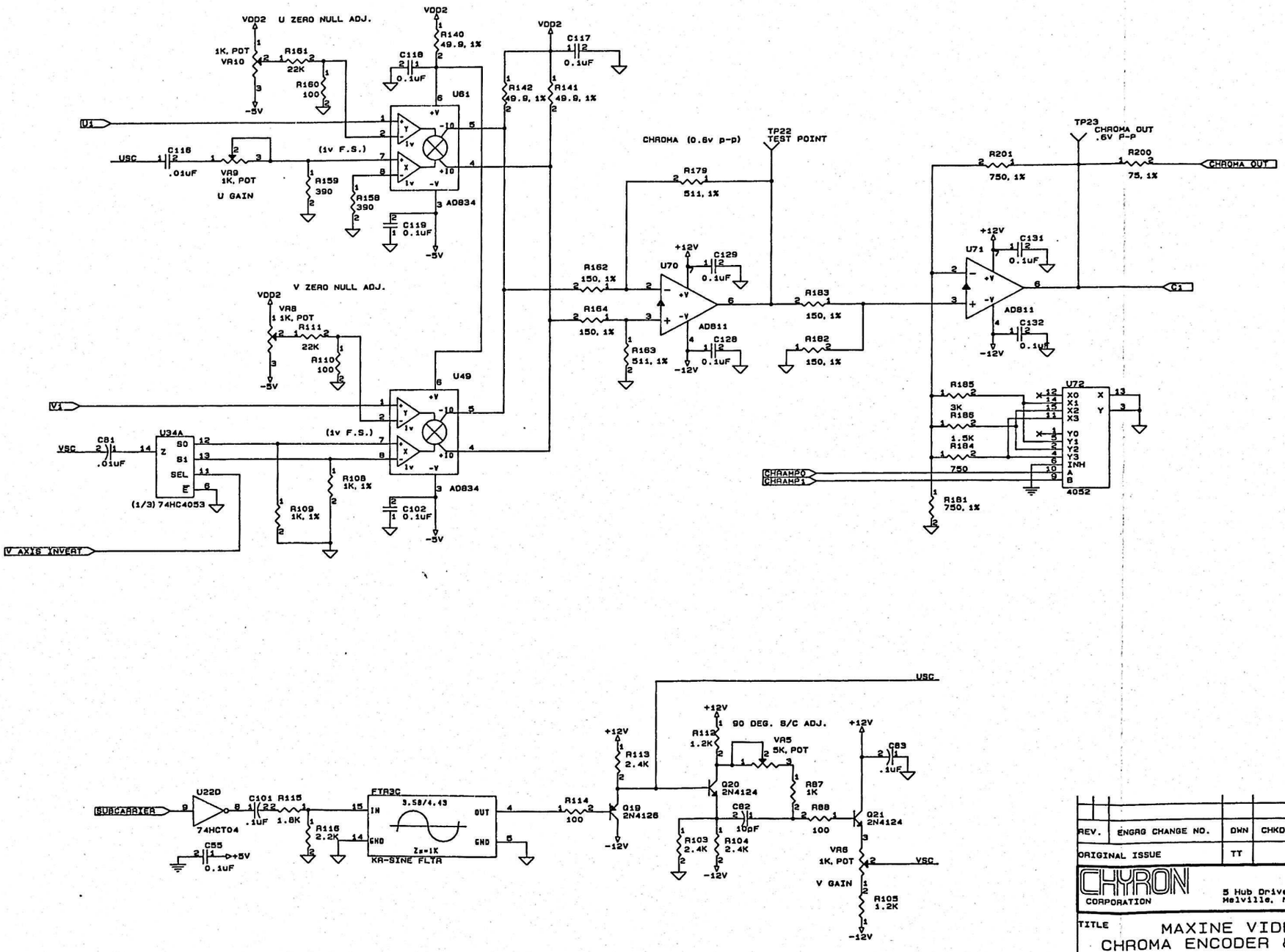

REV.	ENGRG CHANGE NO.	DWN	CHKD.	APP'D.	MO. DAY YR.
ORIGINAL ISSUE		TT			09-02-92

CHYRON CORPORATION
5 Hub Drive
Melville, New York 11747

TITLE: MAXINE VIDEO BOARD
CHROMA ENCODER & Y/C OUTPUT

SH. 15 OF 17

DOCUMENT NUMBER: 2A01707 REV G

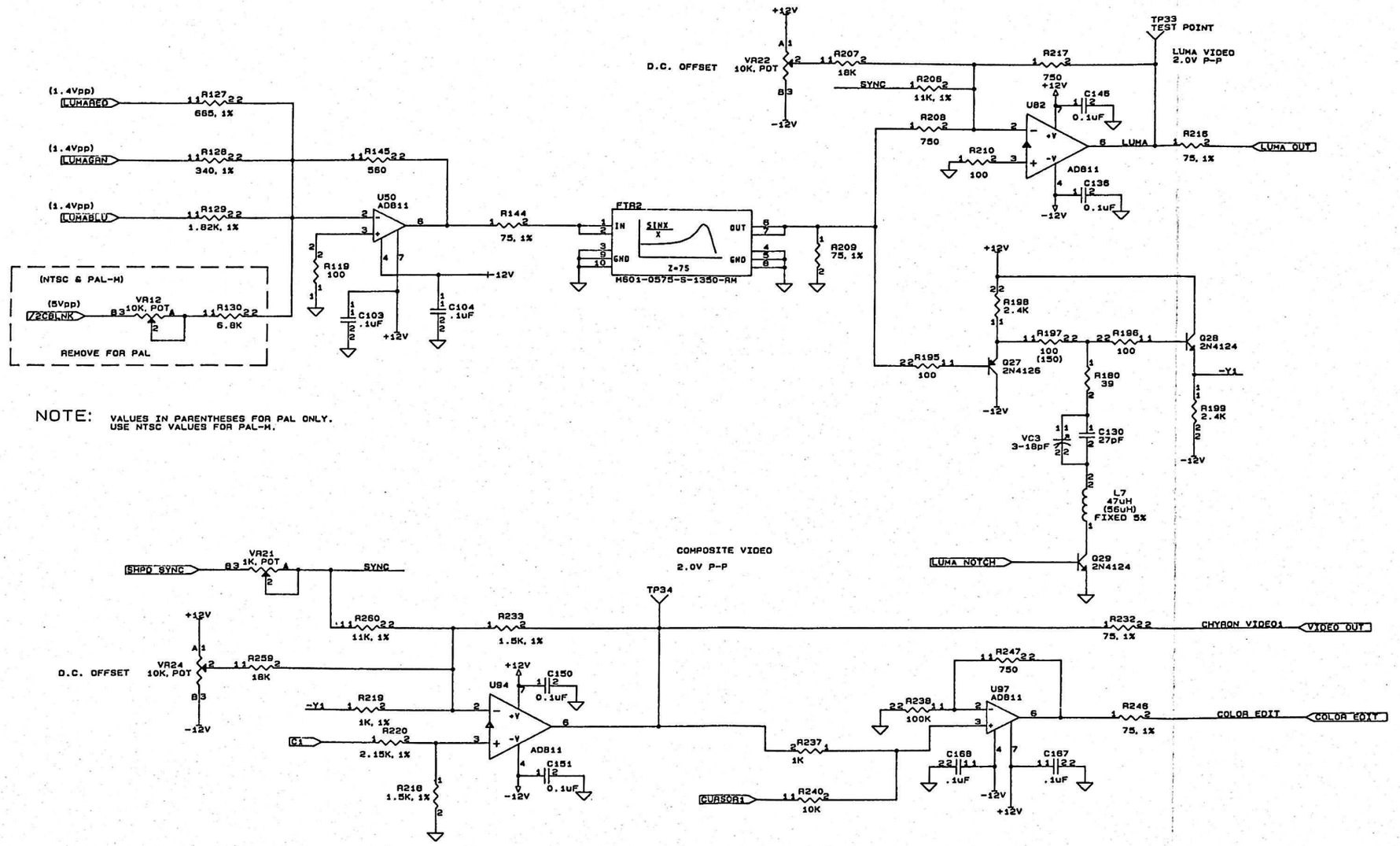

OUTPUT SUMMING & CABLE DRIVER

REV.	ENGRG CHANGE NO.	DWN	CHKD.	APP'D.	MO. DAY YR.
ORIGINAL ISSUE		TT			09-02-92

CHYRON CORPORATION
5 Hub Drive
Melville, New York 11747

TITLE: MAXINE VIDEO BOARD
LUMA/COMP VID./COLOR EDIT

SH. 16

DOCUMENT NUMBER: 2A01707 REV G

OF 17

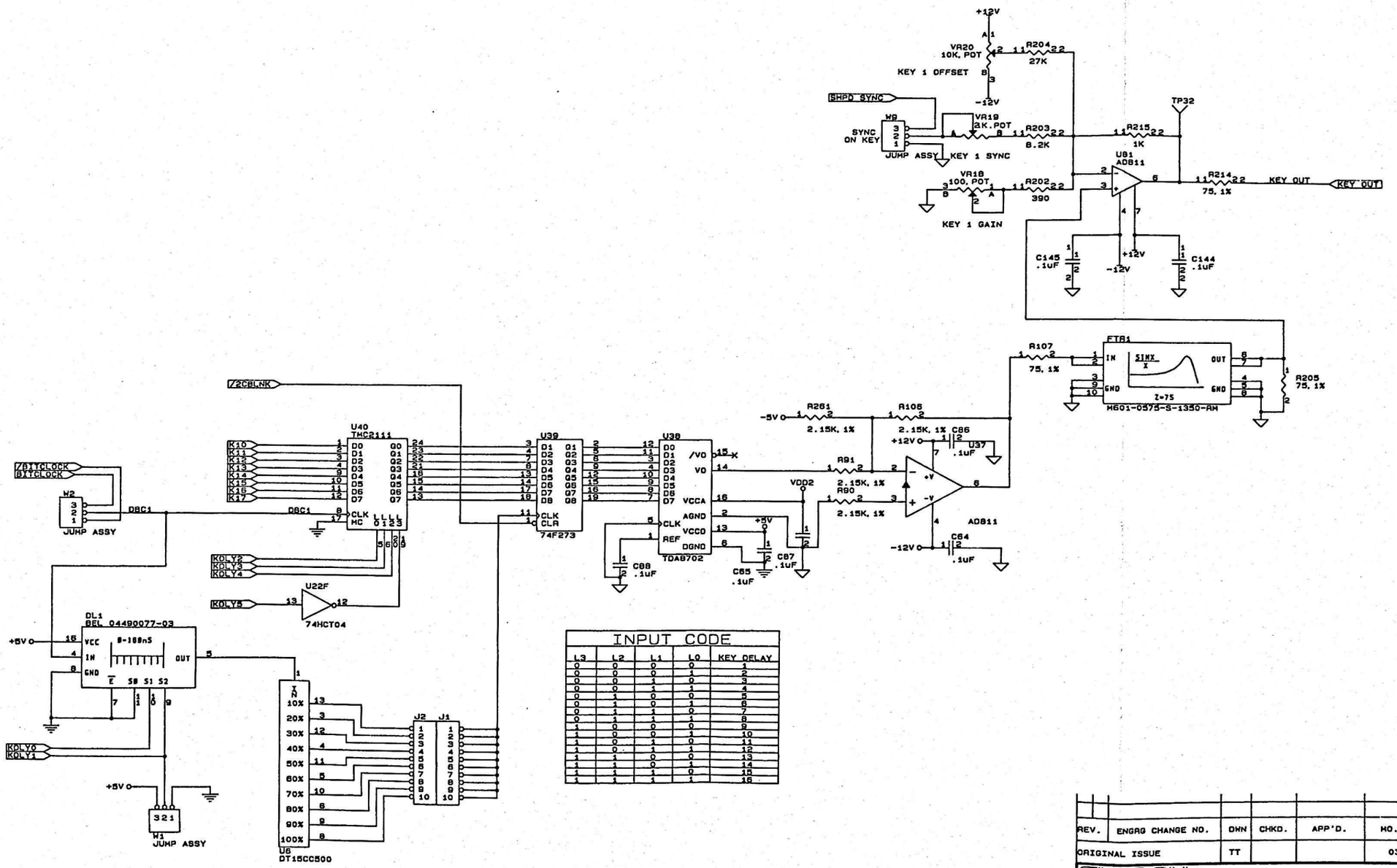

INPUT CODE

L3	L2	L1	L0	KEY DELAY
0	0	0	0	1
0	0	0	1	2
0	0	1	0	3
0	0	1	1	4
0	1	0	0	5
0	1	0	1	6
0	1	1	0	7
0	1	1	1	8
1	0	0	0	9
1	0	0	1	10
1	0	1	0	11
1	0	1	1	12
1	1	0	0	13
1	1	0	1	14
1	1	1	0	15
1	1	1	1	16

REV.	ENGRG CHANGE NO.	DWN	CHKD.	APP'D.	MO. DAY YR.
ORIGINAL ISSUE		TT			03-11-92

CHYRON CORPORATION
5 Hub Drive
Melville, New York 11747

TITLE: MAXINE VIDEO BOARD
KEY SIGNAL GENERATOR

SH. 17

DOCUMENT NUMBER: 2A01707 REV G

OF 17

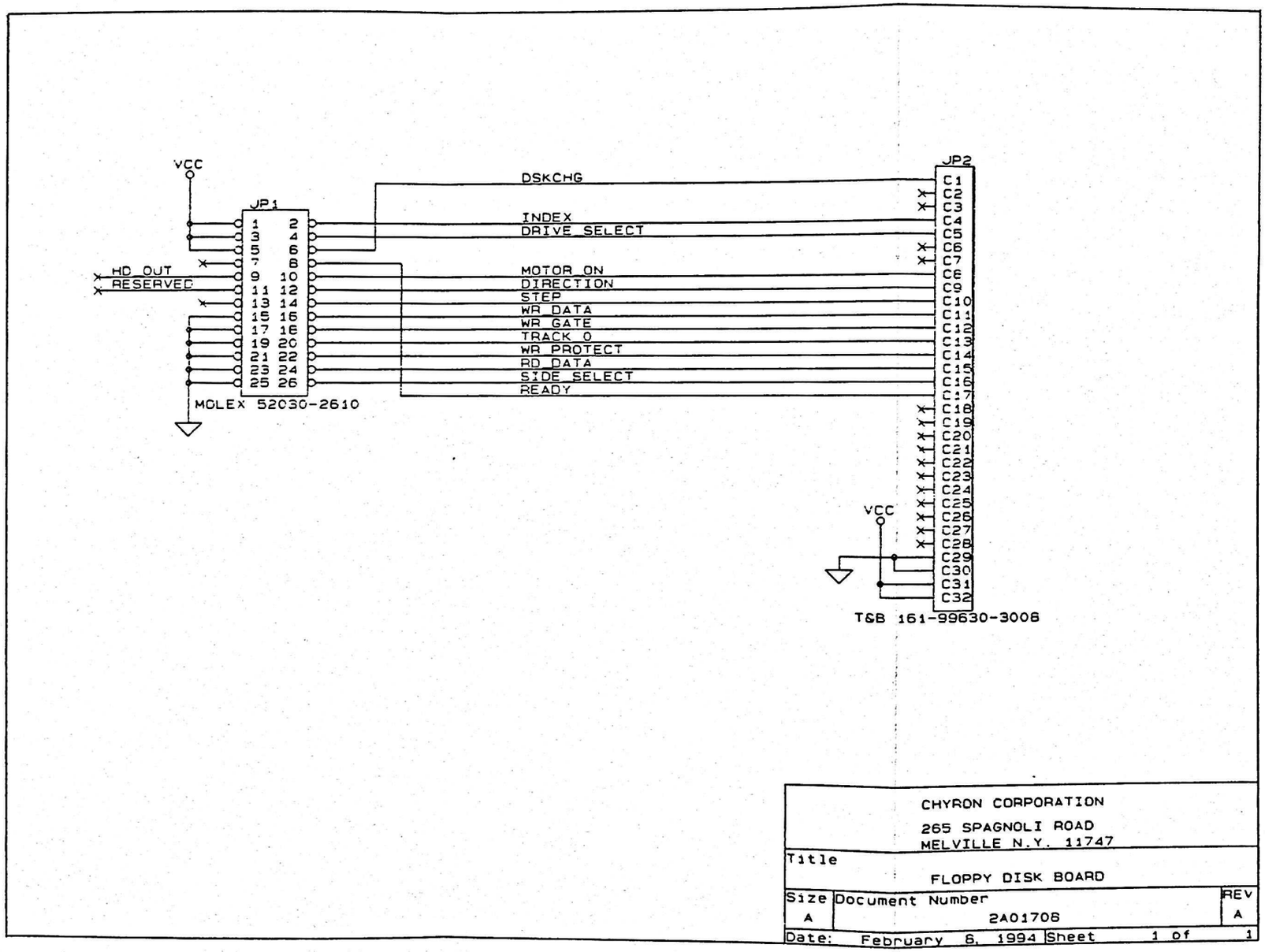
VCC
JP1
1 2
3 4
5 6
7 8
9 10
11 12
13 14
15 16
17 18
19 20
21 22
23 24
25 26
HD OUT
RESERVED
MOLEX 52030-2610
DSKCHG
INDEX
DRIVE SELECT
MOTOR ON
DIRECTION
STEP
WR DATA
WR GATE
TRACK 0
WR PROTECT
RD DATA
SIDE SELECT
READY
JP2
C1
C2
C3
C4
C5
C6
C7
C8
C9
C10
C11
C12
C13
C14
C15
C16
C17
C18
C19
C20
C21
C22
C23
C24
C25
C26
C27
C28
C29
C30
C31
C32
VCC
T&B 161-99630-3006
CHYRON CORPORATION
265 SPAGNOLI ROAD
MELVILLE N.Y. 11747
Title
FLOPPY DISK BOARD
Size
A
Document Number
2A01708
REV
A
Date: February 8, 1994
Sheet 1 of 1

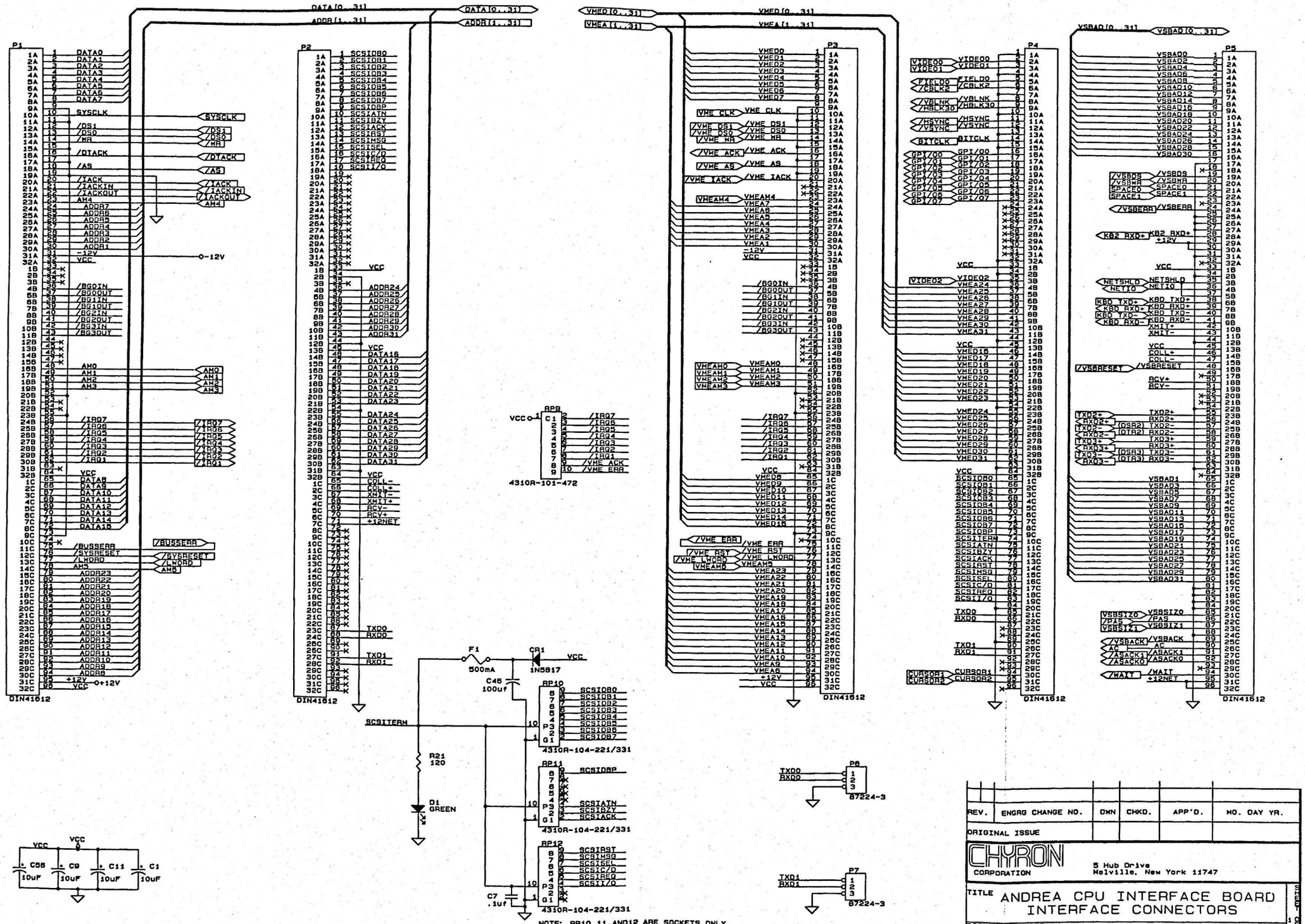
P1
P2
P3
P4
P5
P6
P7
DIN41612
4310R-101-472
4310R-104-221/331
SCSITERM
NOTE: RP10, 11, AND12 ARE SOCKETS ONLY.
REV.
ENGRG CHANGE NO.
DWN
CHKD.
APP'D.
MO. DAY YR.
ORIGINAL ISSUE
CHYRON CORPORATION
5 Hub Drive
Melville, New York 11747
TITLE
ANDREA CPU INTERFACE BOARD
INTERFACE CONNECTORS
DOCUMENT NUMBER
2A01709 REV J

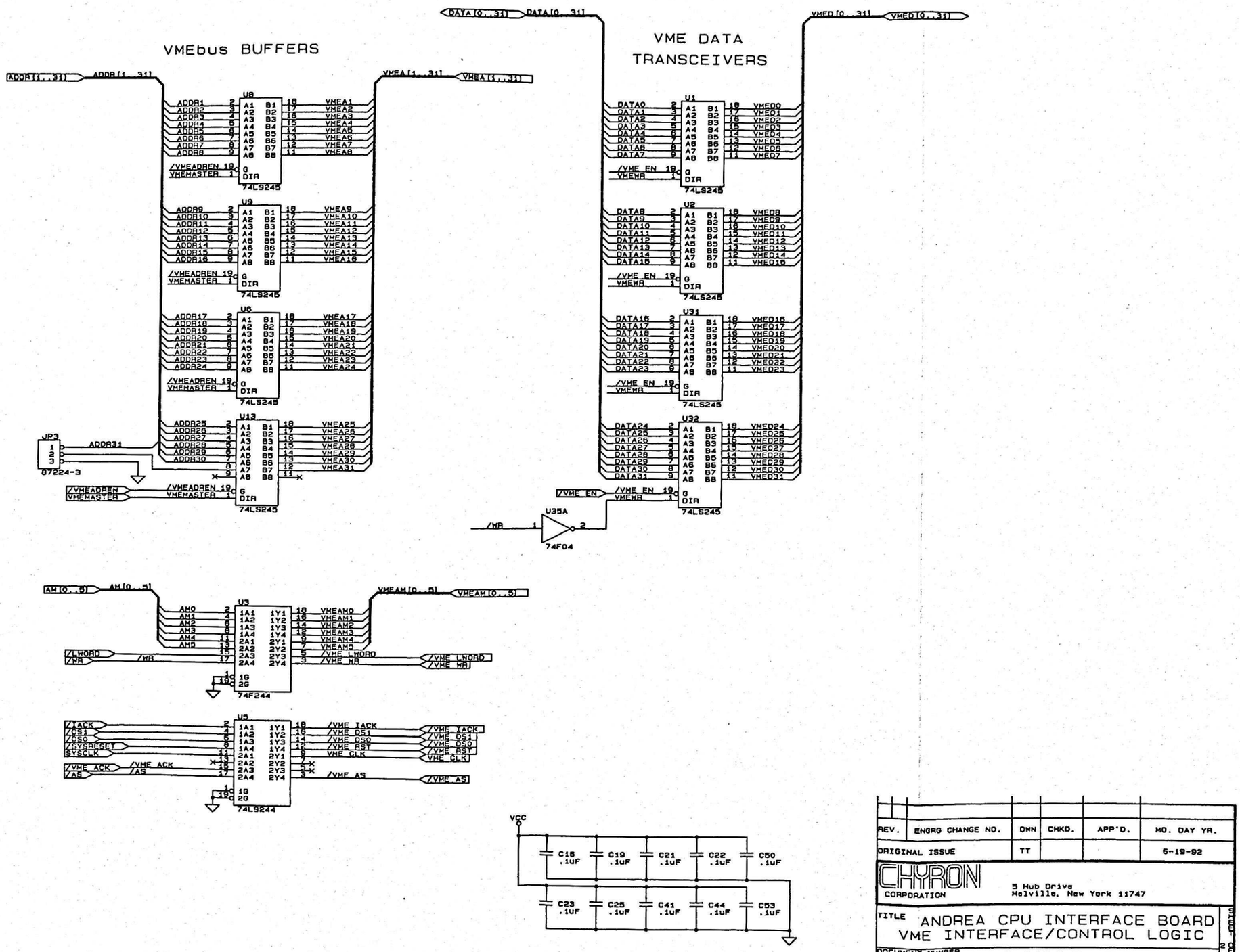

REV.	ENGRG CHANGE NO.	DWN	CHKD.	APP'D.	MO. DAY YR.
ORIGINAL ISSUE		TT			6-19-92

CHYRON CORPORATION
5 Hub Drive
Melville, New York 11747

TITLE: ANDREA CPU INTERFACE BOARD
VME INTERFACE/CONTROL LOGIC

DOCUMENT NUMBER: 2A01709 REV J

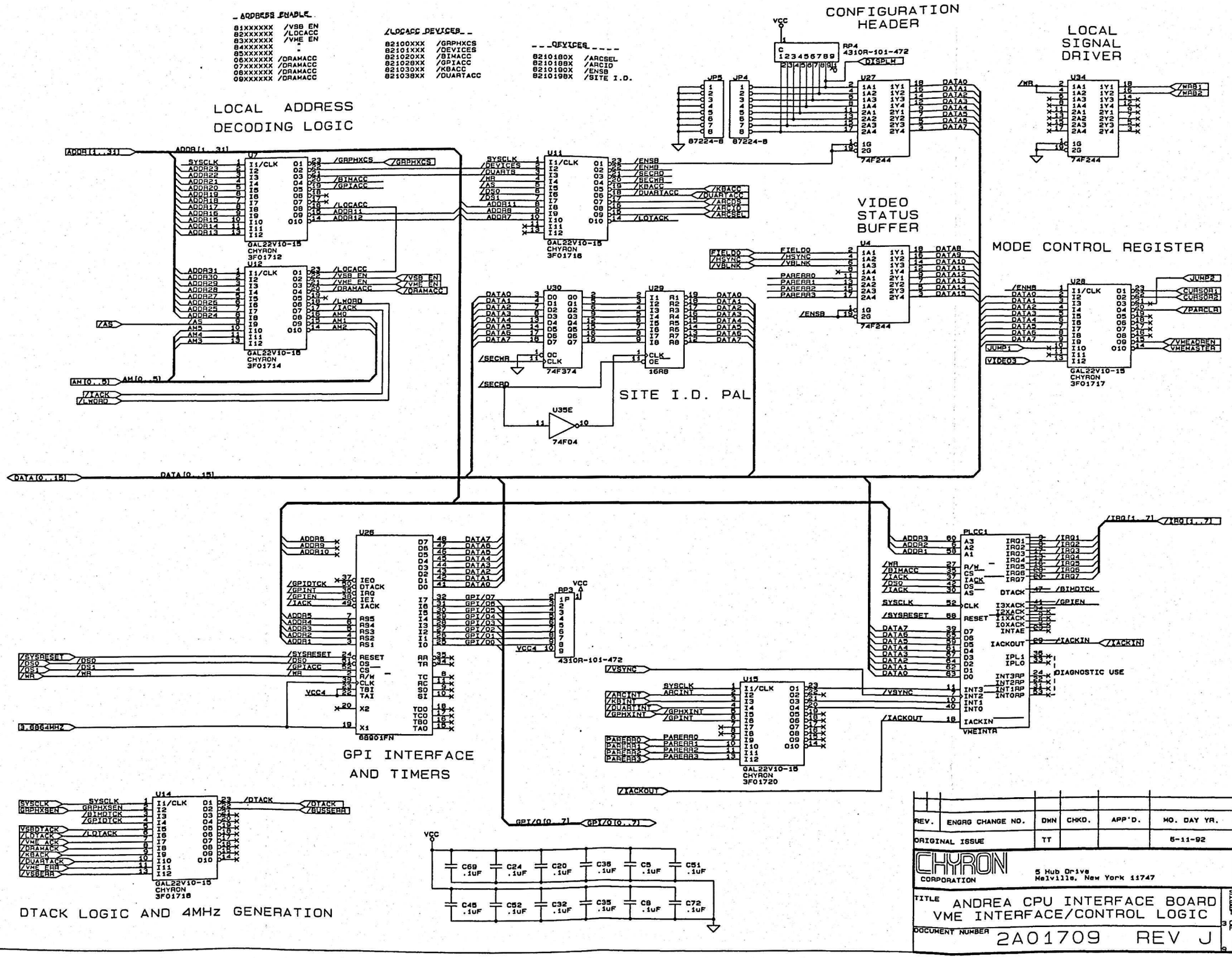
ADDRESS ENABLE
81XXXXXX /VSB EN
82XXXXXX /LOCACC
83XXXXXX /VME EN
84XXXXXX -
85XXXXXX -
06XXXXXX /DRAMACC
07XXXXXX /DRAMACC
08XXXXXX /DRAMACC
09XXXXXX /DRAMACC
/LOCACC DEVICES
82100XXX /GRPHXCS
82101XXX /DEVICES
821020XX /BIMACC
821028XX /GPIACC
821030XX /KBACC
821038XX /DUARTACC
DEVICES
8210180X /ARCSEL
8210188X /ARCID
8210190X /ENSB
8210198X /SITE I.D.
CONFIGURATION HEADER
LOCAL SIGNAL DRIVER
LOCAL ADDRESS DECODING LOGIC
VIDEO STATUS BUFFER
MODE CONTROL REGISTER
SITE I.D. PAL
GPI INTERFACE AND TIMERS
DTACK LOGIC AND 4MHz GENERATION
ANDREA CPU INTERFACE BOARD
VME INTERFACE/CONTROL LOGIC
2A01709 REV J
CHYRON CORPORATION
5 Hub Drive
Melville, New York 11747

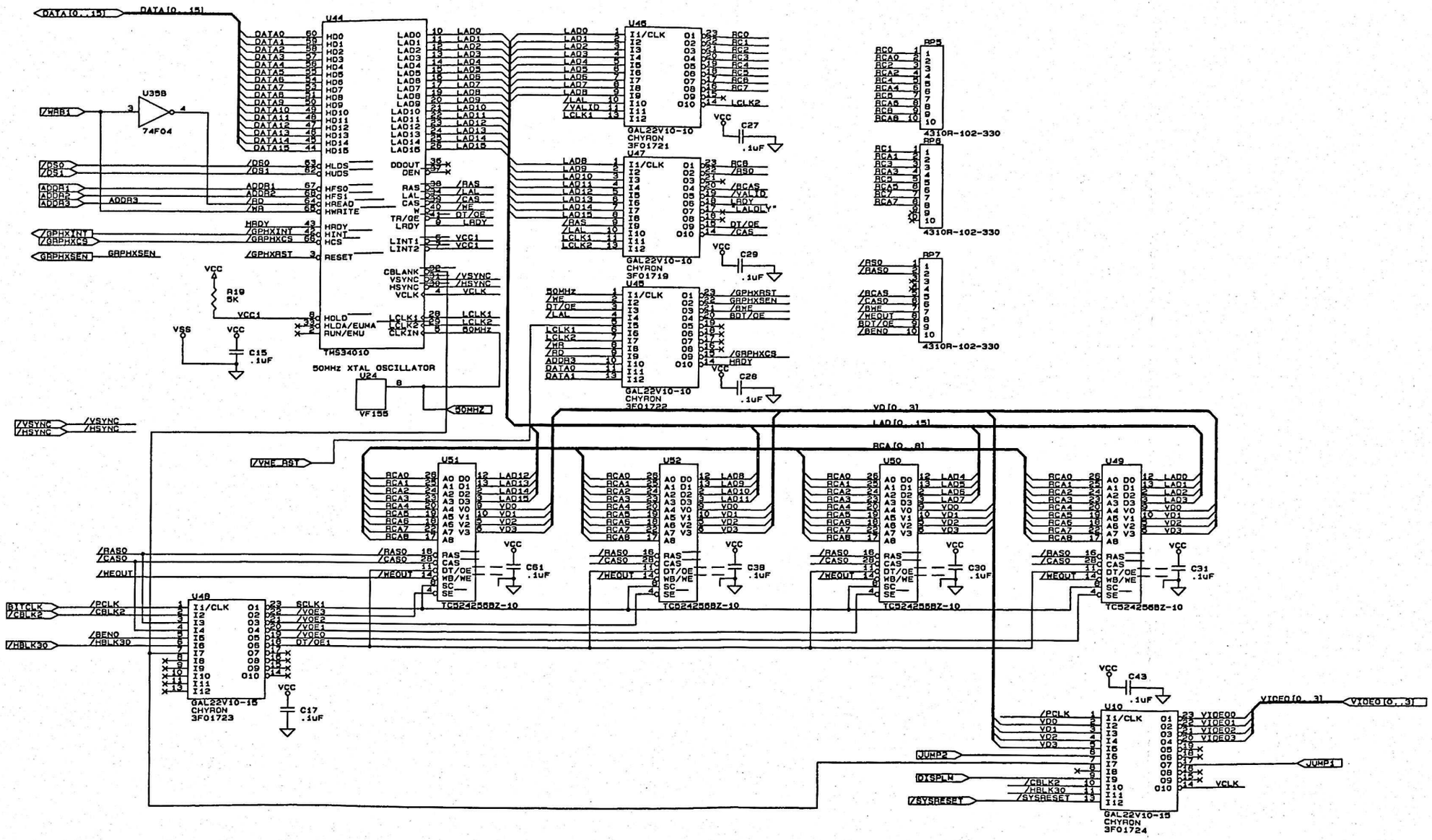

REV.	ENGRG CHANGE NO.	DWN	CHKD.	APP'D.	MO. DAY YR.
ORIGINAL ISSUE		TT			6-11-92

CHYRON CORPORATION
5 Hub Drive
Melville, New York 11747

TITLE: ANDREA CPU INTERFACE BOARD
PROMPT CHANNEL LOGIC

DOCUMENT NUMBER: 2A01709 REVJ

SHEET 4 OF 9

VME TO VSB ADDRESS/DATA CONVERTER

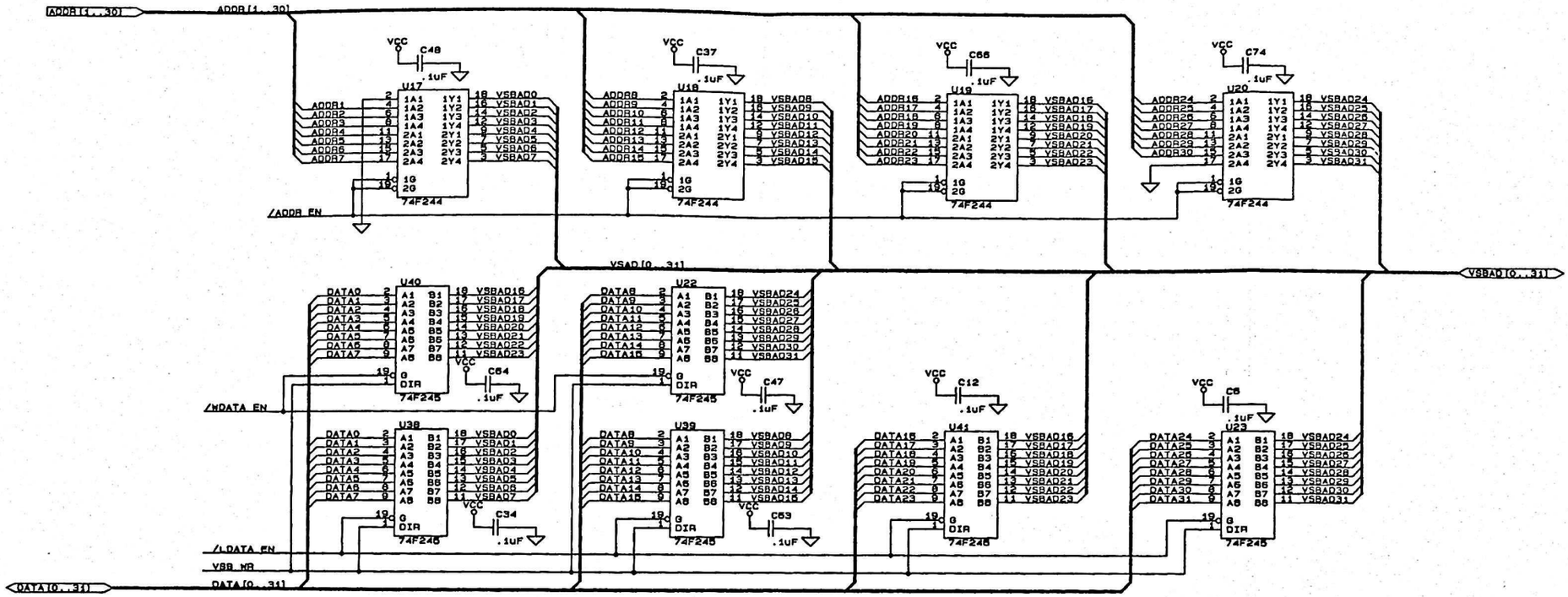

VME TO VSB CNTRL SIGNAL CONVERSION

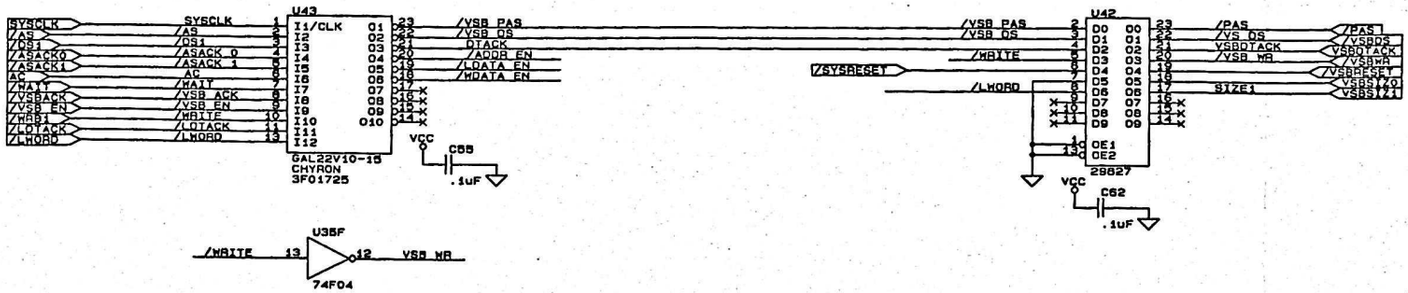

VSBbus TERMINATORS

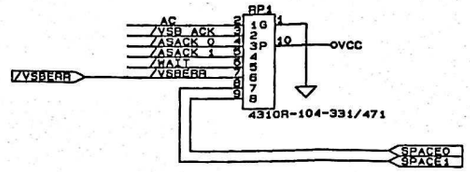

REV.	ENGRG CHANGE NO.	DWN	CHKD.	APP'D.	MO. DAY YR.
ORIGINAL ISSUE		TT			6-11-92

CHYRON CORPORATION
5 Hub Drive
Melville, New York 11747

TITLE: ANDREA CPU INTERFACE BOARD
VME/VSB INTERFACE

DOCUMENT NUMBER: 2A01709 REV J

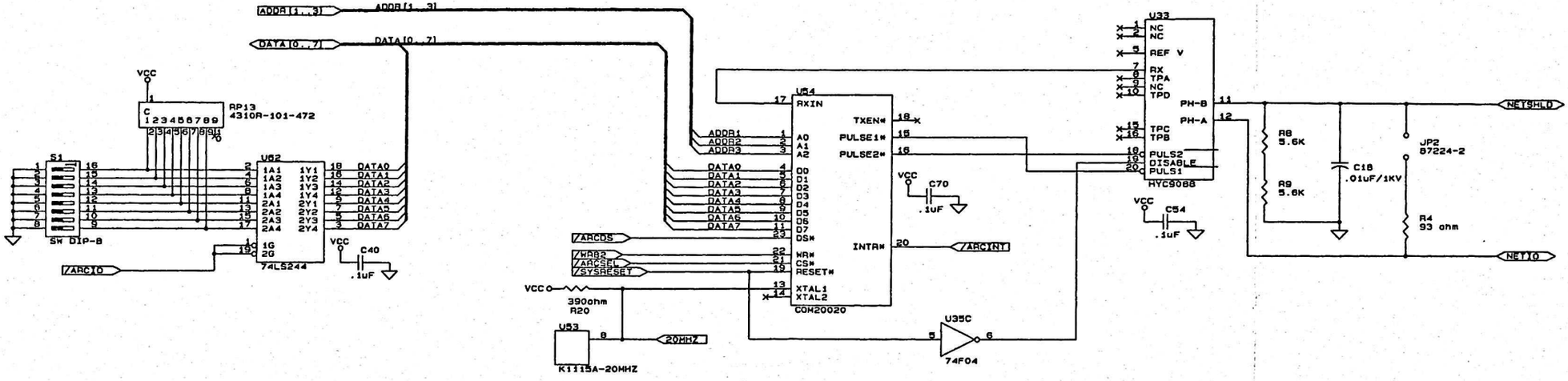

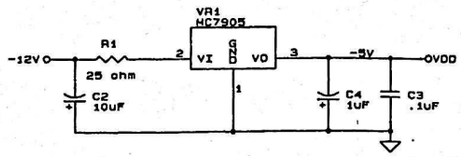

REV.	ENGRG CHANGE NO.	DWN	CHKD.	APP'D.	MO. DAY YR.
ORIGINAL ISSUE		TT			6-14-91

CHYRON CORPORATION
5 Hub Drive
Melville, New York 11747

TITLE: ANDREA CPU INTERFACE BOARD
ARCNET CONTROLLER

SH. 6 OF 9

DOCUMENT NUMBER: 2A01709 REV J

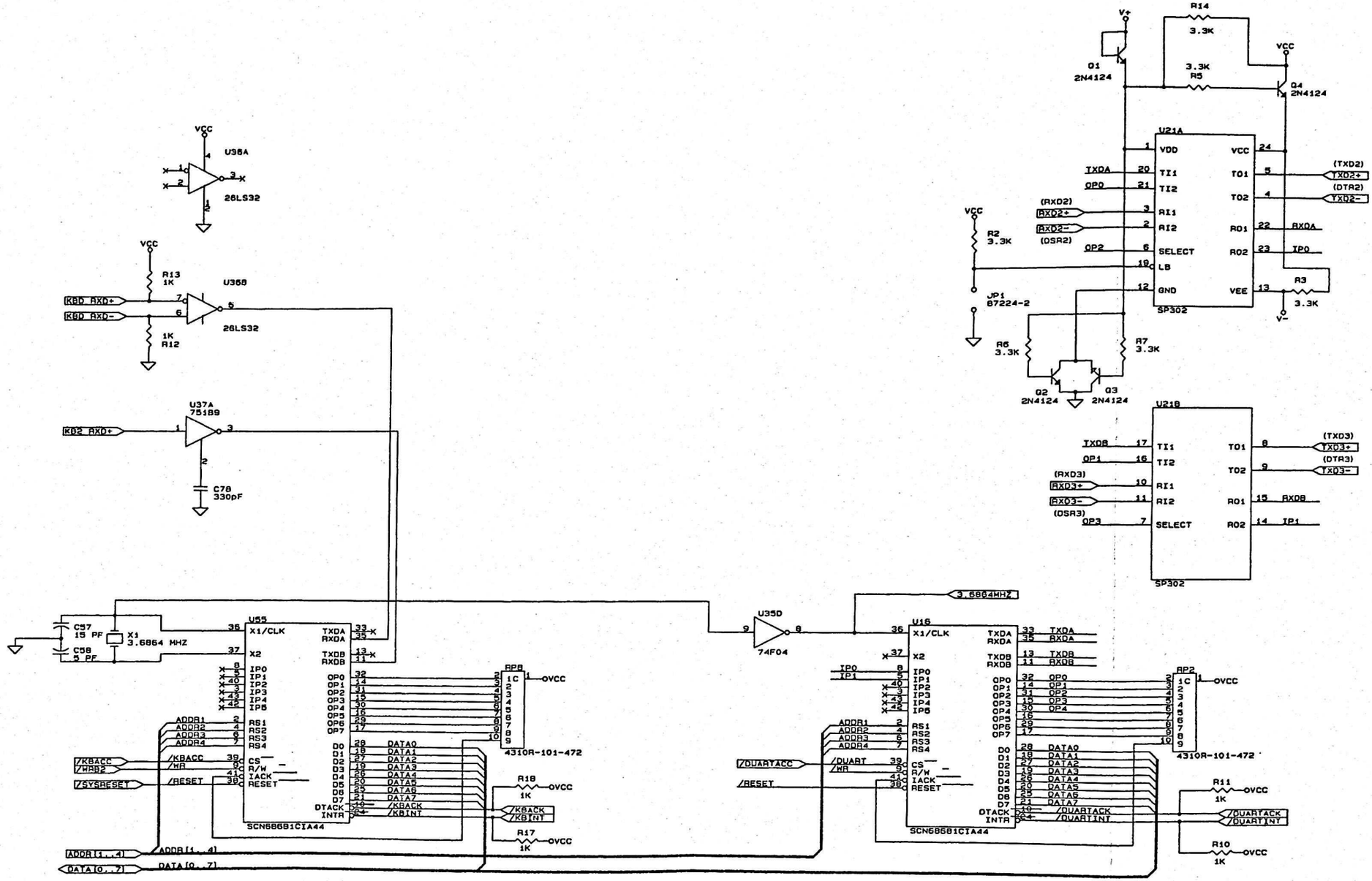

REV.	ENGRG CHANGE NO.	DWN	CHKD.	APP'D.	MO. DAY YR.
ORIGINAL ISSUE		TT			6-14-91

CHYRON CORPORATION
5 Hub Drive
Melville, New York 11747

TITLE: ANDREA CPU INTERFACE BOARD
DUART'S

SH. 7 OF 9

DOCUMENT NUMBER: 2A01709 REV J

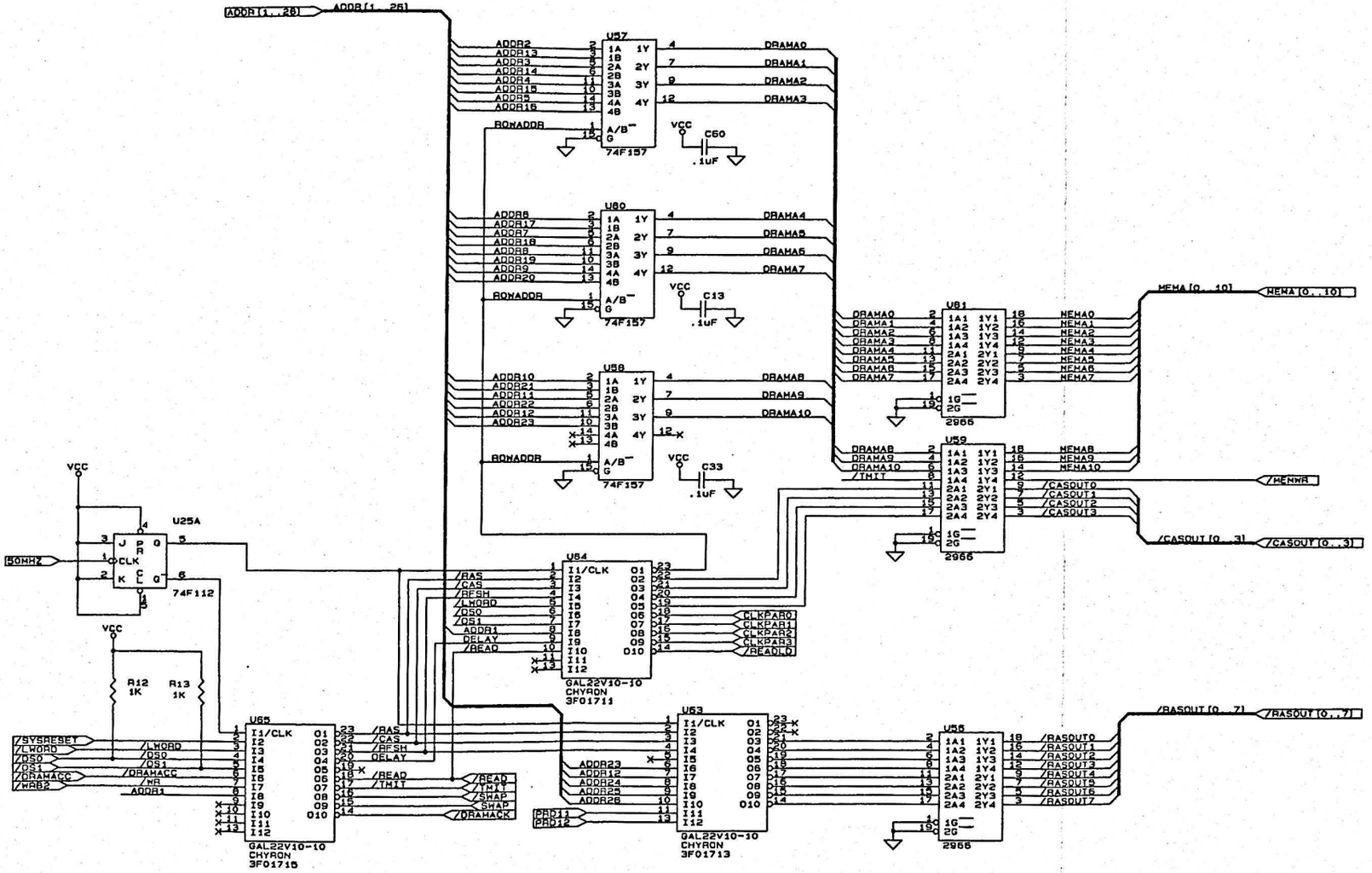

REV.	ENGRG CHANGE NO.	DWN	CHKD.	APP'D.	MO. DAY YR.
ORIGINAL ISSUE		TT			6-19-92

CHYRON CORPORATION
5 Hub Drive
Melville, New York 11747

TITLE: ANDREA CPU INTERFACE BOARD
DRAM CONTROLLER

SH. 8 OF 9

DOCUMENT NUMBER: 2A01709 REV J

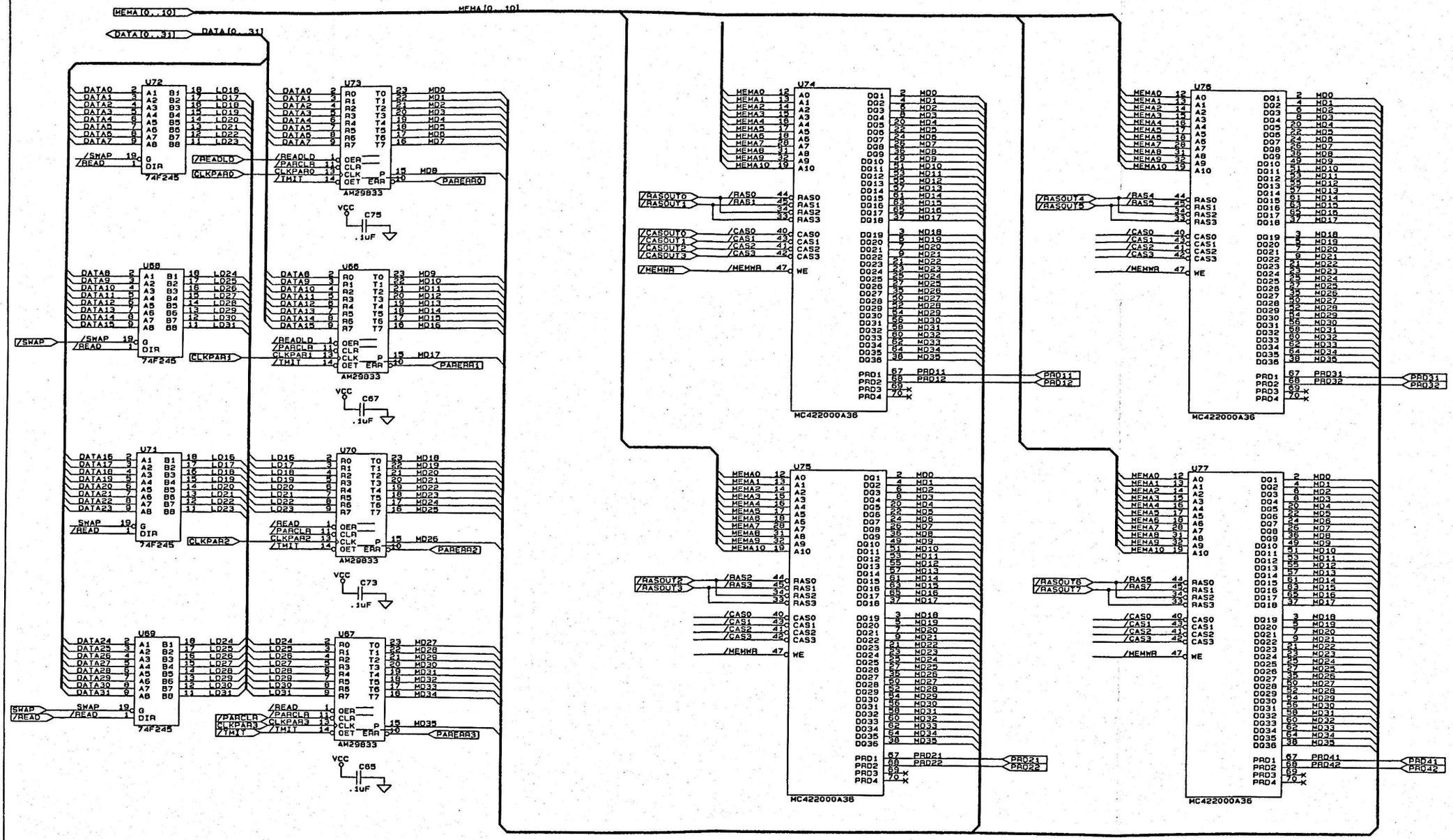

REV.	ENGRG CHANGE NO.	DWN	CHKD.	APP'D.	MO. DAY YR.
ORIGINAL ISSUE		TT			6-19-92

CHYRON CORPORATION
5 Hub Drive
Melville, New York 11747

TITLE: ANDREA CPU INTERFACE BOARD 64MB DRAM

SH. 9 OF 9

DOCUMENT NUMBER: 2A01709 REV J

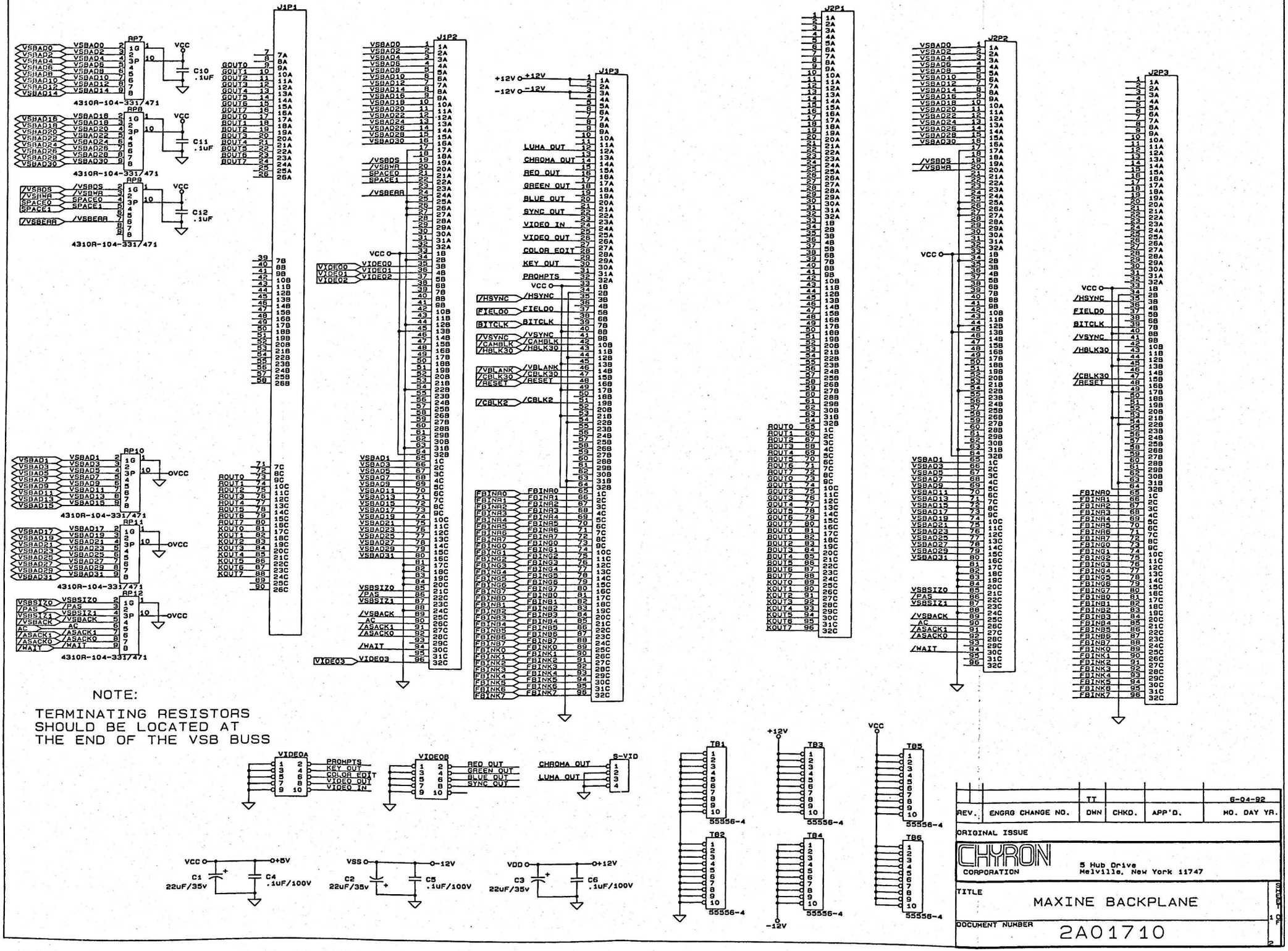
J1P1
J1P2
J1P3
J2P1
J2P2
J2P3
RP7
RP8
RP9
RP10
RP11
RP12
4310R-104-331/471
C10 .1UF
C11 .1UF
C12 .1UF
VCC
NOTE:
TERMINATING RESISTORS SHOULD BE LOCATED AT THE END OF THE VSB BUSS
VIDEOA
VIDEOB
S-VID
PROMPTS
KEY OUT
COLOR EDIT
VIDEO OUT
VIDEO IN
REO OUT
GREEN OUT
BLUE OUT
SYNC OUT
CHROMA OUT
LUMA OUT
T81
T82
T83
T84
T85
T86
55556-4
+5V
-12V
+12V
C1 22uF/35v
C2 22uF/35v
C3 22uF/35v
C4 .1uF/100V
C5 .1uF/100V
C6 .1uF/100V
REV.
ENGRG CHANGE NO.
DWN
CHKD.
APP'D.
MO. DAY YR.
TT
6-04-92
ORIGINAL ISSUE
CHYRON CORPORATION
5 Hub Drive
Melville, New York 11747
TITLE
MAXINE BACKPLANE
DOCUMENT NUMBER
2A01710
SHEET OF

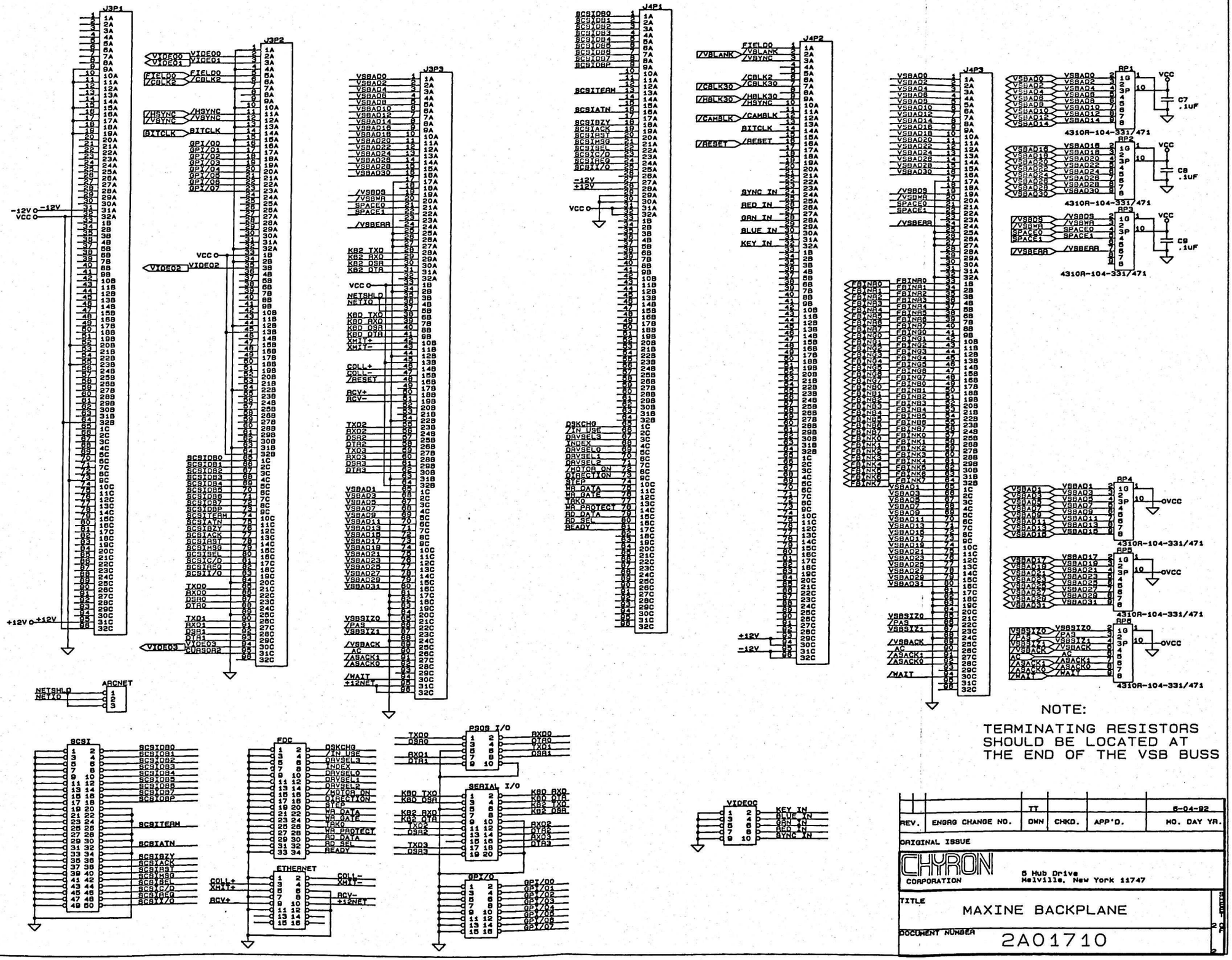
J3P1
J3P2
J3P3
J4P1
J4P2
J4P3
ARCNET
SCSI
FDC
ETHERNET
PSOS I/O
SERIAL I/O
GPI/O
VIDEOC
RP1
RP2
RP3
RP4
RP5
RP6
4310R-104-331/471
C7 .1UF
C8 .1UF
VCC
OVCC
NOTE:
TERMINATING RESISTORS SHOULD BE LOCATED AT THE END OF THE VSB BUSS
REV.
ENGRG CHANGE NO.
DWN
CHKD.
APP'D.
MO. DAY YR.
6-04-92
ORIGINAL ISSUE
CHYRON CORPORATION
5 Hub Drive
Melville, New York 11747
TITLE
MAXINE BACKPLANE
DOCUMENT NUMBER
2A01710

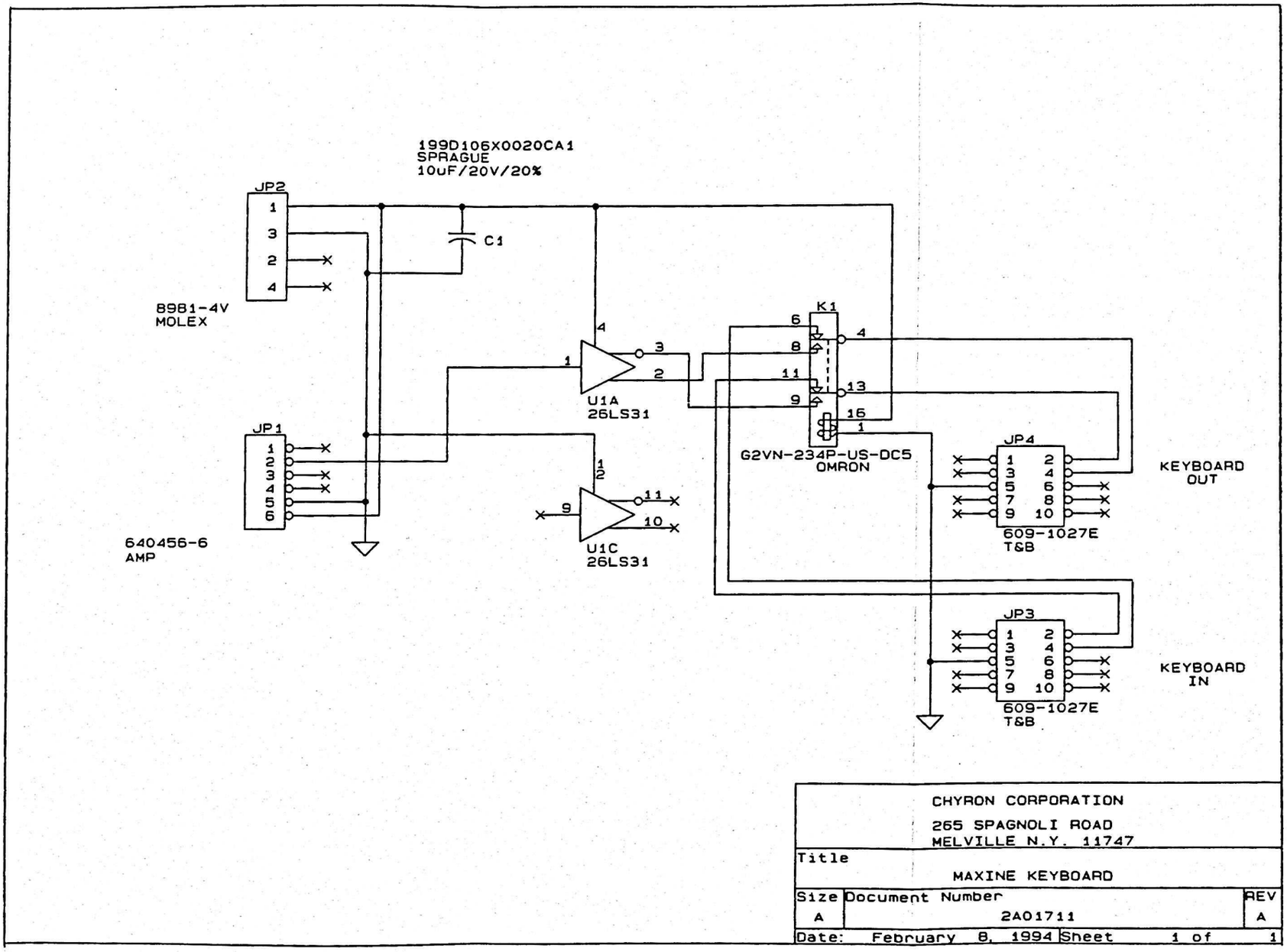
199D106X0020CA1
SPRAGUE
10uF/20V/20%
JP2
1
3
2
4
8981-4V
MOLEX
C1
K1
6
8
11
9
4
13
16
1
G2VN-234P-US-DC5
OMRON
U1A
26LS31
4
3
2
1
JP1
1
2
3
4
5
6
640456-6
AMP
U1C
26LS31
12
9
11
10
JP4
1 2
3 4
5 6
7 8
9 10
609-1027E
T&B
KEYBOARD
OUT
JP3
1 2
3 4
5 6
7 8
9 10
609-1027E
T&B
KEYBOARD
IN
CHYRON CORPORATION
265 SPAGNOLI ROAD
MELVILLE N.Y. 11747
Title
MAXINE KEYBOARD
Size
A
Document Number
2A01711
REV
A
Date: February 8, 1994
Sheet 1 of 1

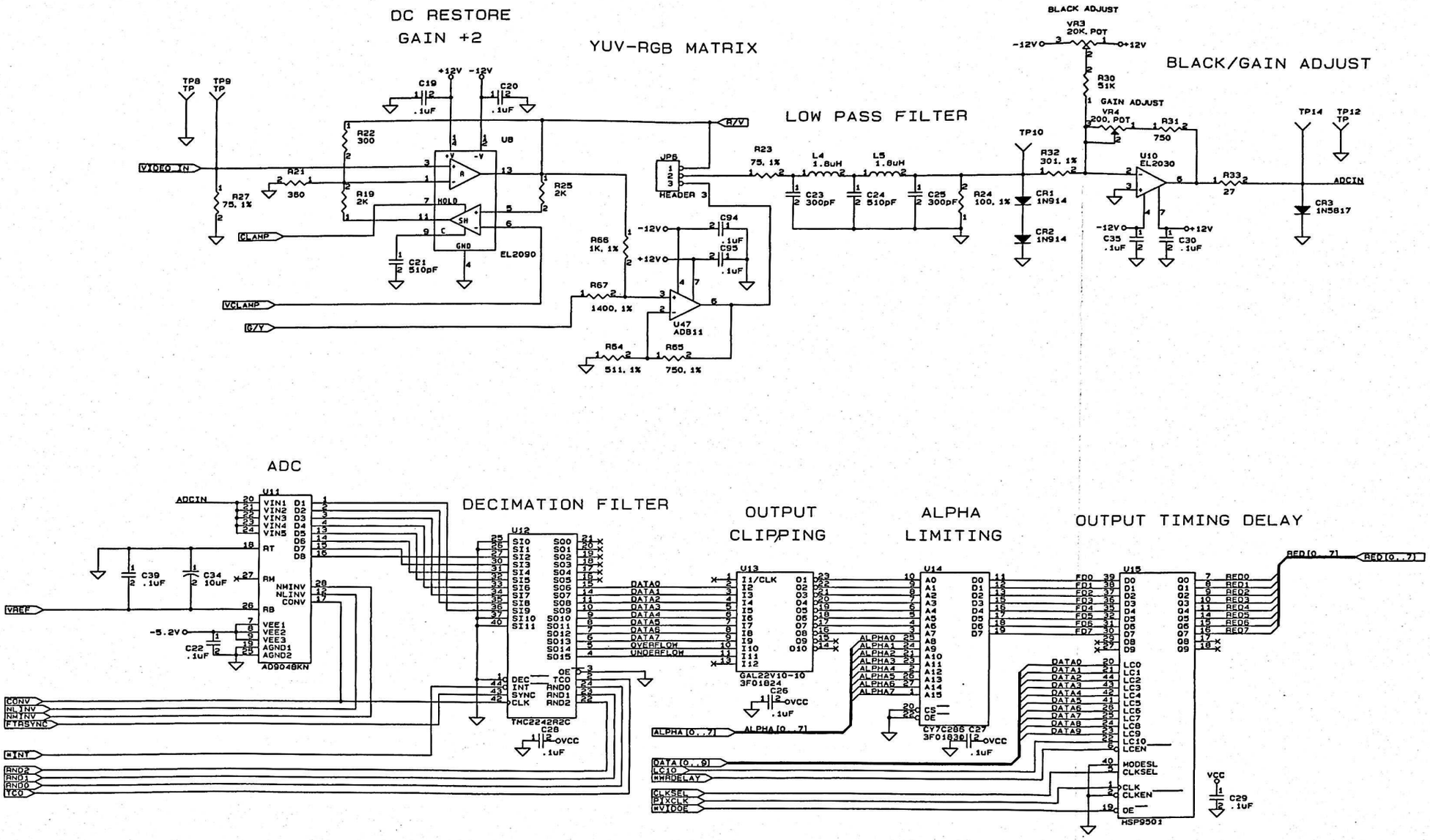

CHYRON CORPORATION		
265 SPAGNOLI ROAD MELVILLE, N.Y. 11747		
Title	MAXINE CAMERA CAPTURE BOARD	
Size C	Document Number 2A01779-1	REV
Date: November 22, 1993	Sheet 1 of 7	

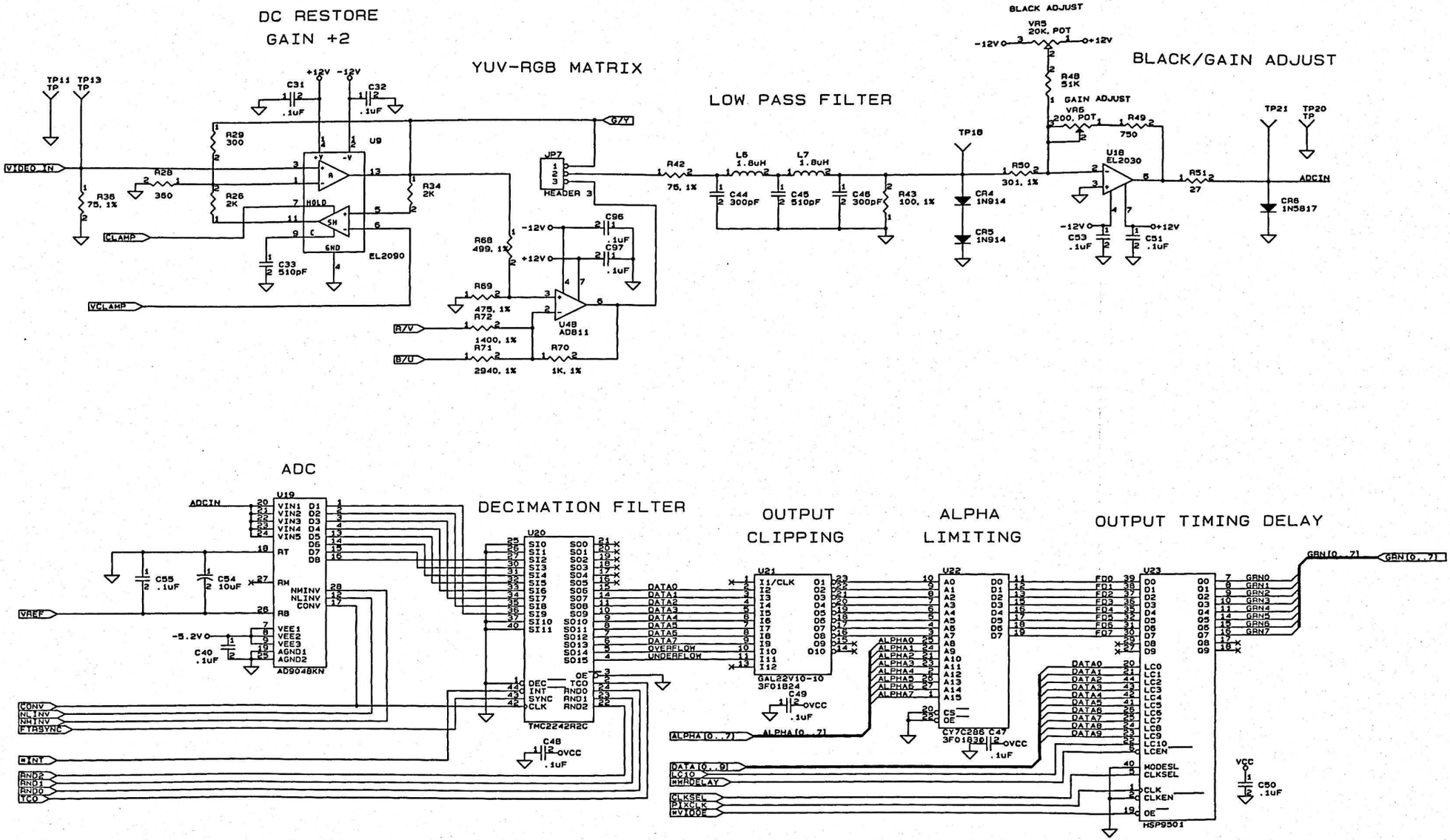

CHYRON CORPORATION 255 SPAGNOLI ROAD MELVILLE, N.Y. 11747		
Title: MAXINE CAMERA CAPTURE BOARD		
Size: C	Document Number: 2A01779-2	REV
Date: November 22, 1993	Sheet 2 of 7	

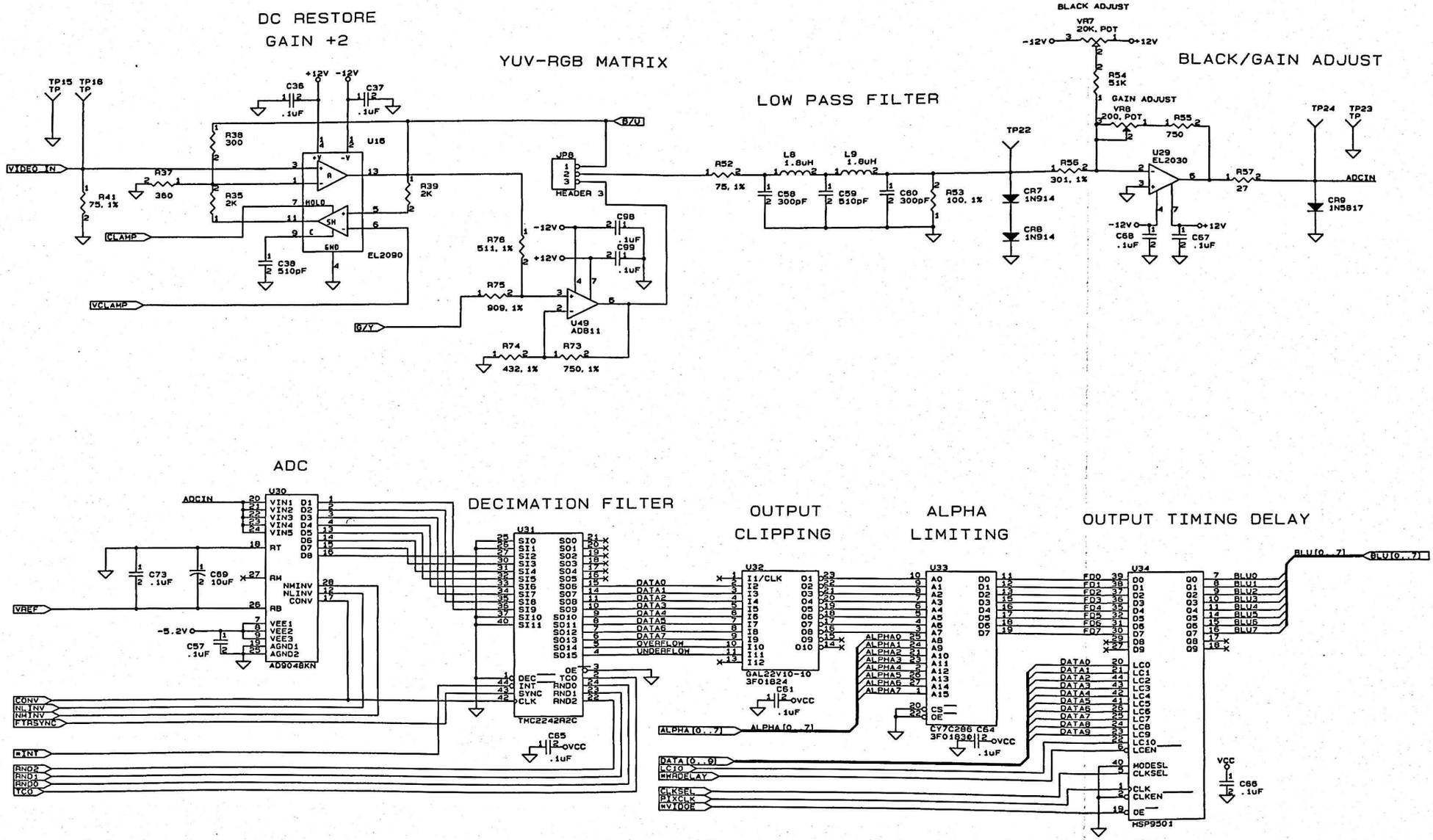

CHYRON CORPORATION
265 SPAGNOLI ROAD
MELVILLE, N.Y. 11747

Title: MAXINE CAMERA CAPTURE BOARD

Size: C | Document Number: 2A01779-3 | REV

Date: November 22, 1993 | Sheet 3 of 7

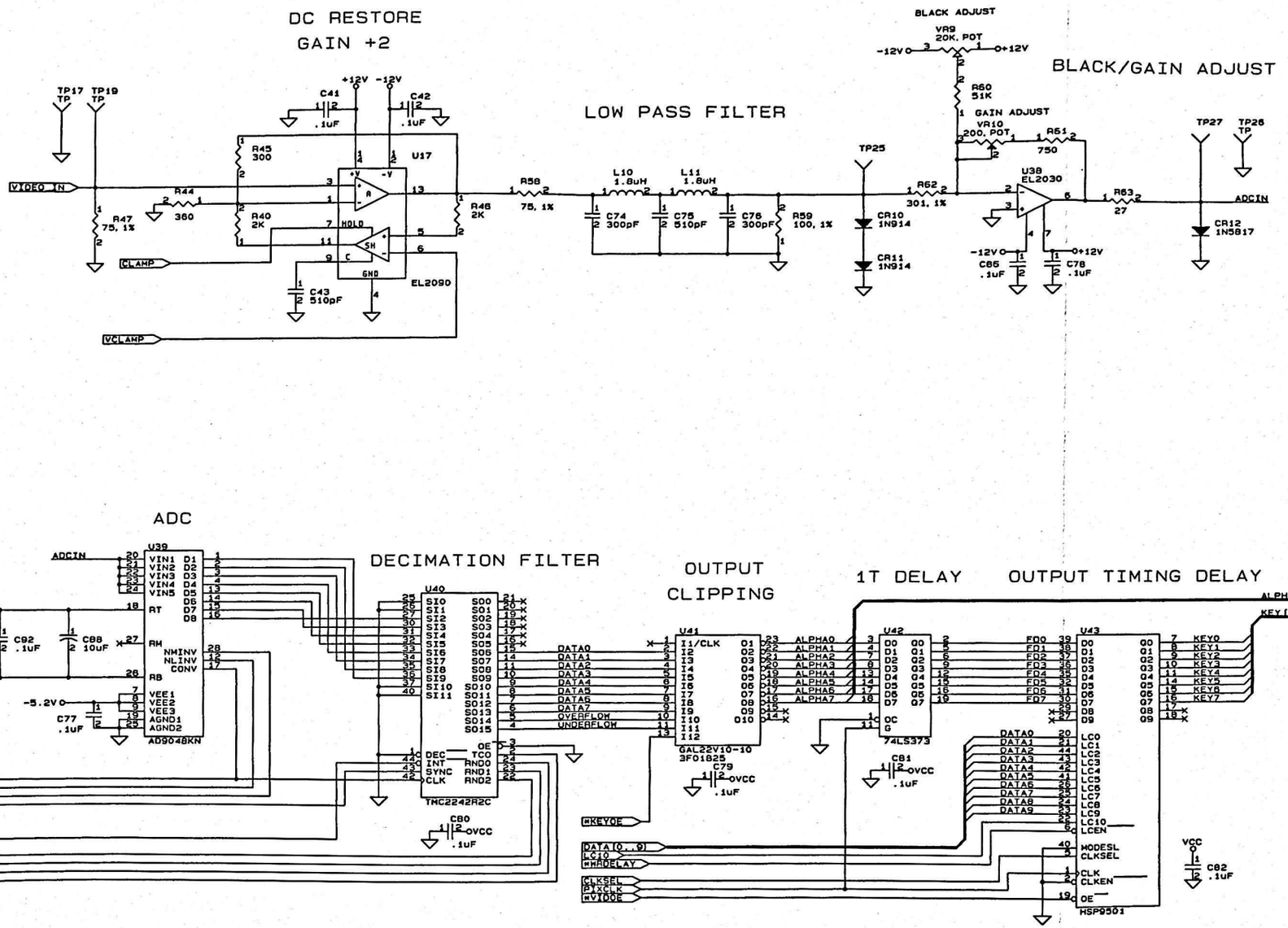

CHYRON CORPORATION 265 SPAGNOLI ROAD MELVILLE, N.Y. 11747		
Title: MAXINE CAMERA CAPTURE BOARD		
Size: C	Document Number: 2A01779-4	REV
Date: November 22, 1993	Sheet 4 of 7	

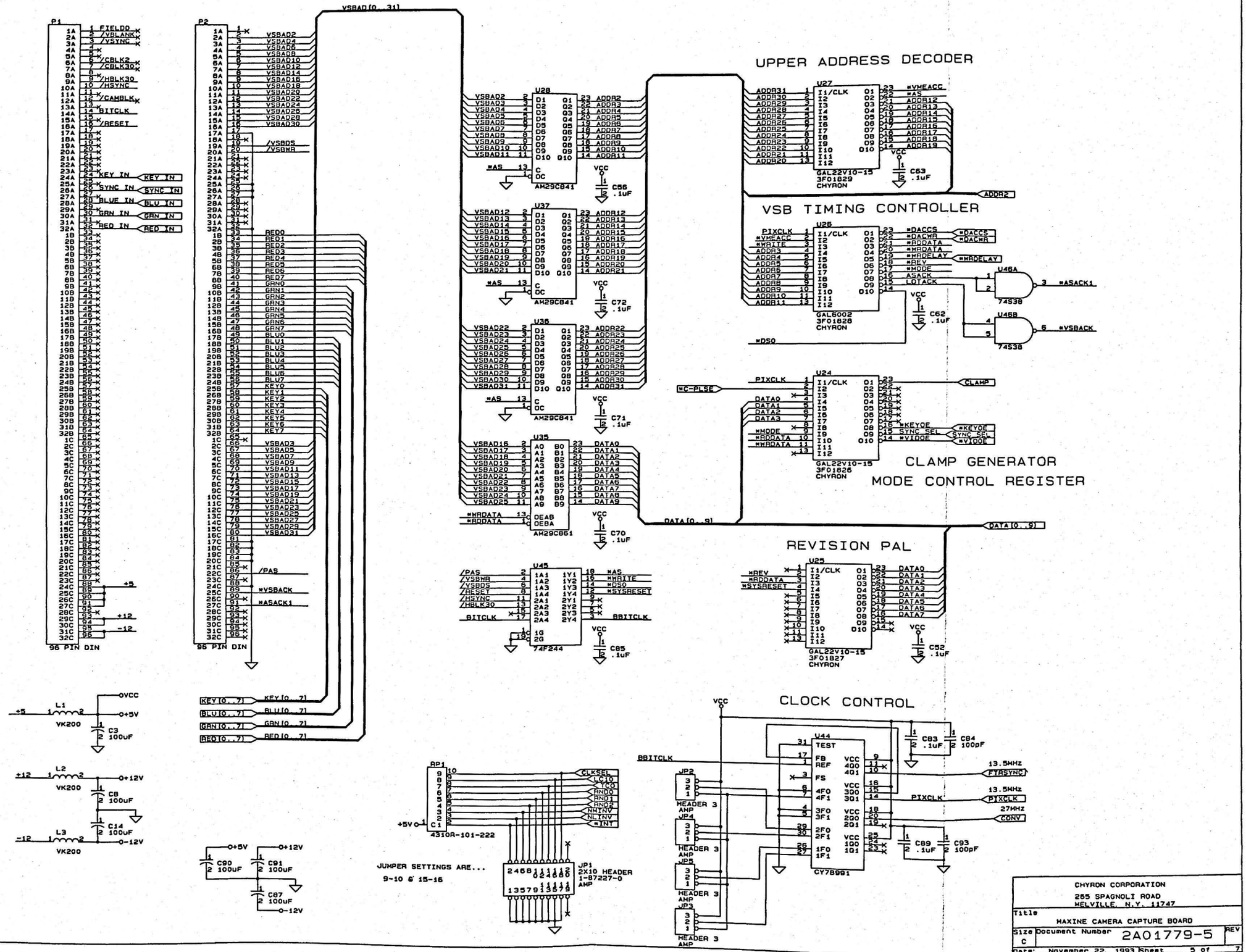
UPPER ADDRESS DECODER
VSB TIMING CONTROLLER
CLAMP GENERATOR
MODE CONTROL REGISTER
REVISION PAL
CLOCK CONTROL
VSBAD[0..31]
DATA[0..9]
P1
P2
96 PIN DIN
U27
U28
U37
U36
U35
U26
U24
U25
U45
U44
U46A
U46B
74S38
74F244
AM29C841
AM29C861
GAL22V10-15
GAL6002
CY7B991
JUMPER SETTINGS ARE...
9-10 & 15-16
CHYRON CORPORATION
255 SPAGNOLI ROAD
MELVILLE, N.Y. 11747
MAXINE CAMERA CAPTURE BOARD
Size C
Document Number 2A01779-5
REV
Date: November 22, 1993 Sheet 5 of 7

SYNC SOURCE SELECTOR

SYNC SEPERATOR

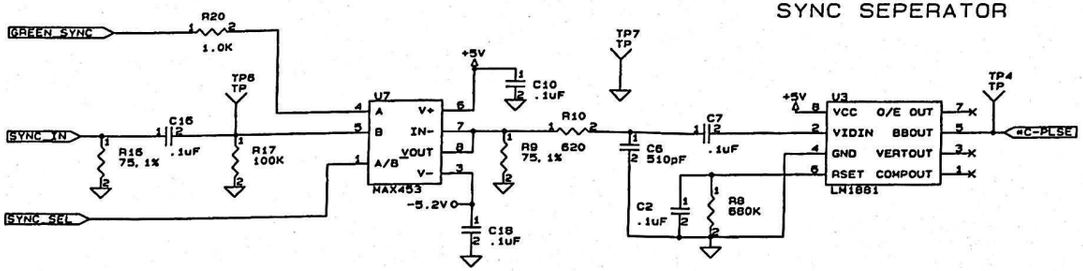

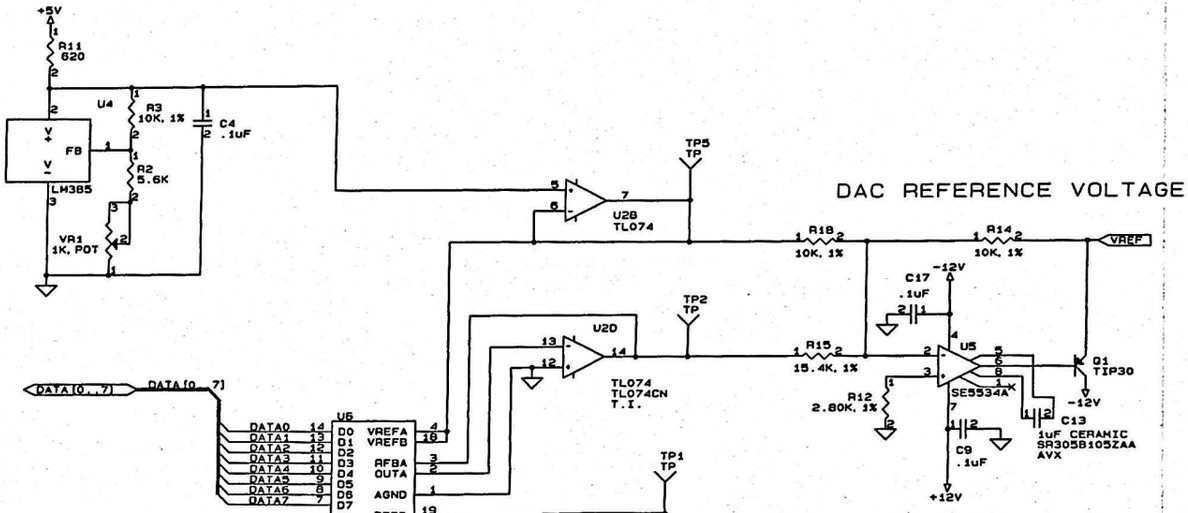

DAC REFERENCE VOLTAGE

DC RESTORE CLAMP VOLTAGE

-5.2V REGULATOR

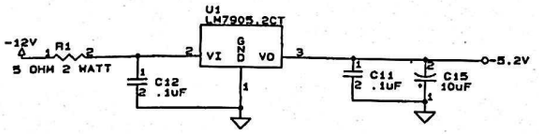

CHYRON CORPORATION 265 SPAGNOLI ROAD MELVILLE, N.Y. 11747		
Title: MAXINE CAMERA CAPTURE BOARD		
Size: C	Document Number: 2A01779-6	REV
Date: November 22, 1993	Sheet 6 of 7	

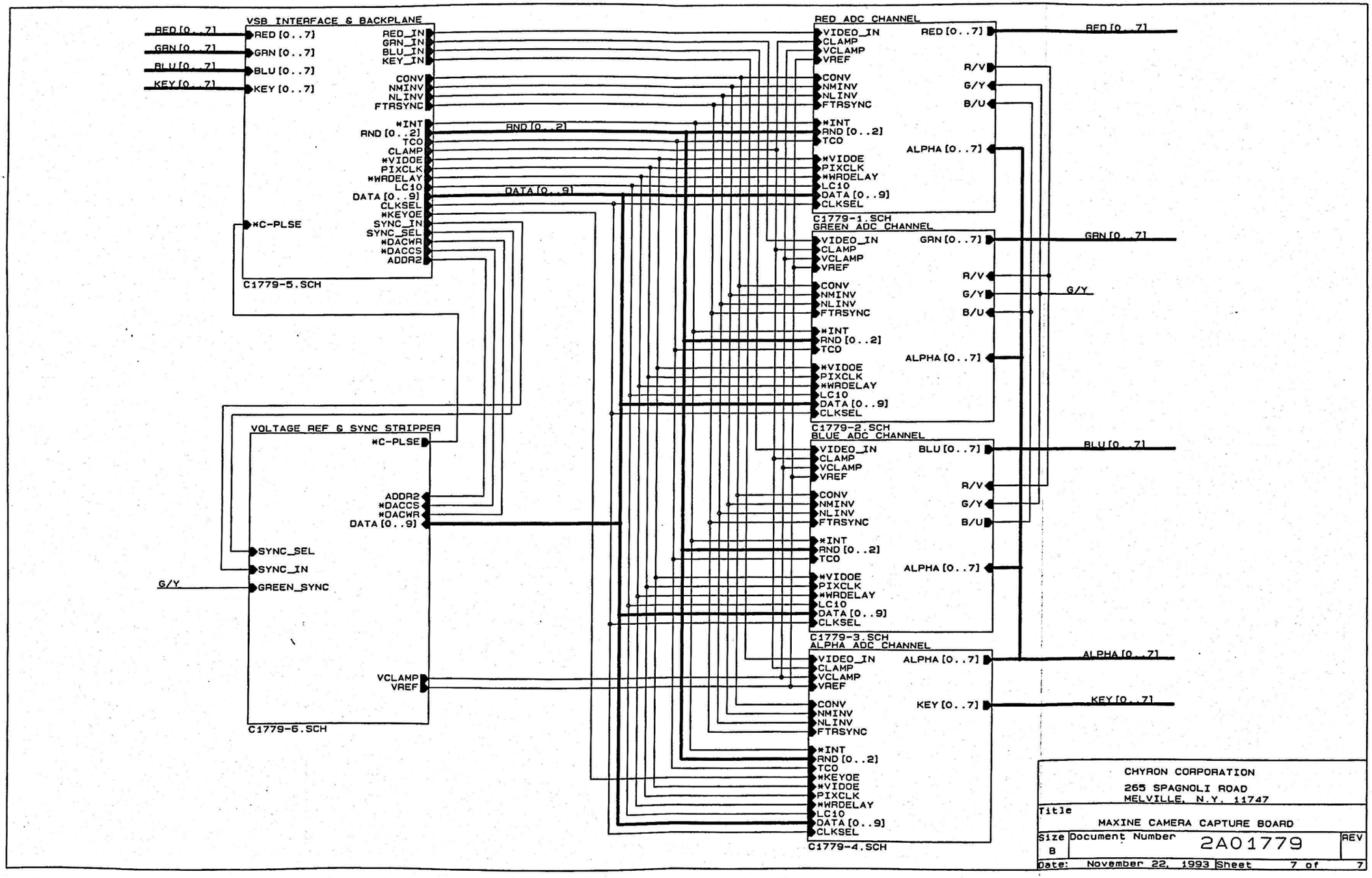
VSB INTERFACE & BACKPLANE
RED [0..7]
GRN [0..7]
BLU [0..7]
KEY [0..7]
*C-PLSE
C1779-5.SCH
RED_IN
GRN_IN
BLU_IN
KEY_IN
CONV
NMINV
NLINV
FTRSYNC
*INT
RND [0..2]
TCO
CLAMP
*VIDOE
PIXCLK
*WRDELAY
LC10
DATA [0..9]
CLKSEL
*KEYOE
SYNC_IN
SYNC_SEL
*DACWR
*DACCS
ADDR2
VOLTAGE REF & SYNC STRIPPER
*C-PLSE
ADDR2
*DACCS
*DACWR
DATA [0..9]
SYNC_SEL
SYNC_IN
G/Y
GREEN_SYNC
VCLAMP
VREF
C1779-6.SCH
RED ADC CHANNEL
VIDEO_IN
CLAMP
VCLAMP
VREF
CONV
NMINV
NLINV
FTRSYNC
*INT
RND [0..2]
TCO
*VIDOE
PIXCLK
*WRDELAY
LC10
DATA [0..9]
CLKSEL
RED [0..7]
R/V
G/Y
B/U
ALPHA [0..7]
C1779-1.SCH
GREEN ADC CHANNEL
GRN [0..7]
C1779-2.SCH
BLUE ADC CHANNEL
BLU [0..7]
C1779-3.SCH
ALPHA ADC CHANNEL
KEY [0..7]
C1779-4.SCH
RED [0..7]
GRN [0..7]
G/Y
BLU [0..7]
ALPHA [0..7]
KEY [0..7]
CHYRON CORPORATION
265 SPAGNOLI ROAD
MELVILLE, N.Y. 11747
Title
MAXINE CAMERA CAPTURE BOARD
Size B
Document Number 2A01779
REV
Date: November 22, 1993
Sheet 7 of 7

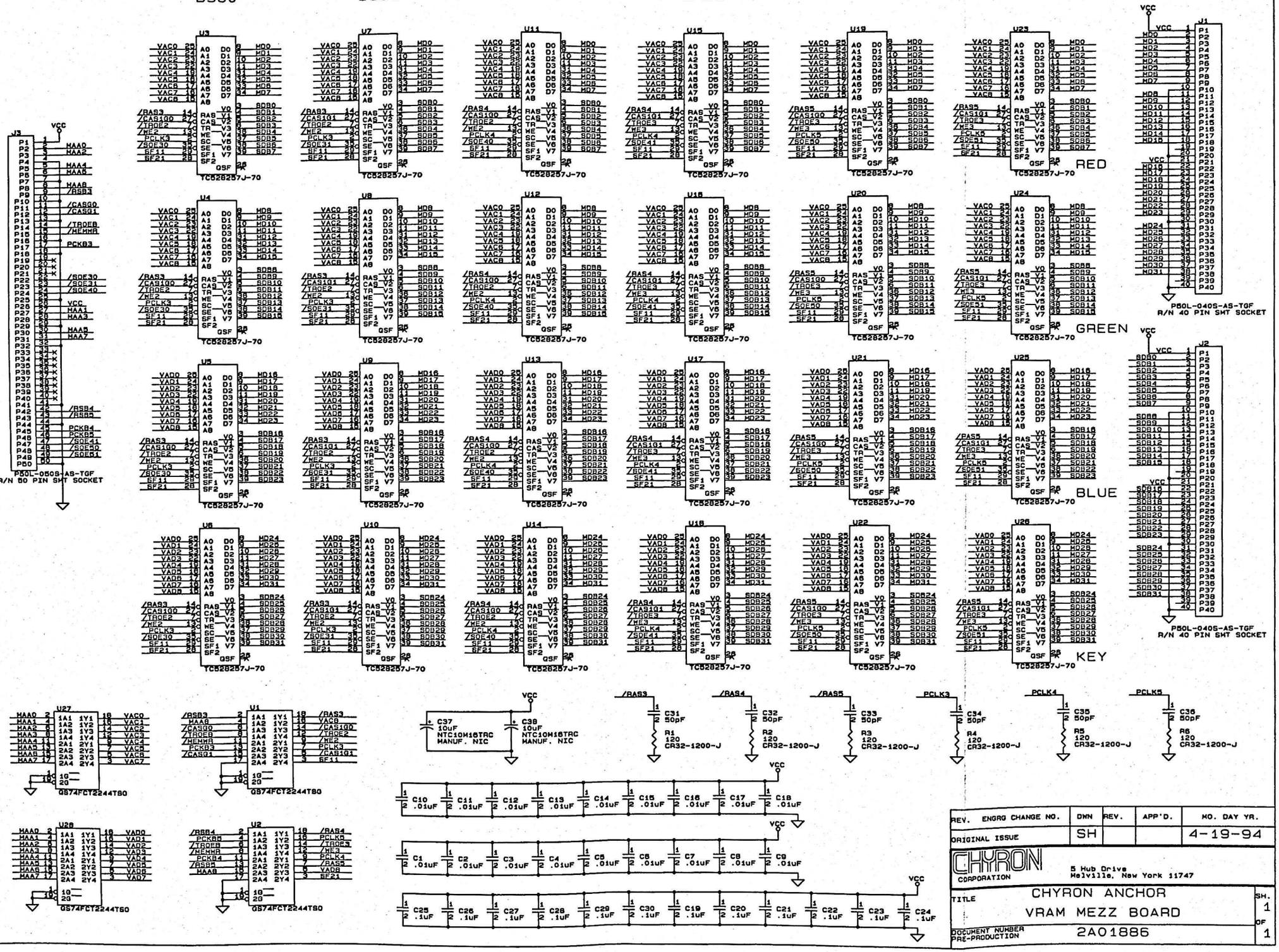

REV.	ENGRG CHANGE NO.	DWN	REV.	APP'D.	NO. DAY YR.
ORIGINAL ISSUE		SH			4-19-94

CHYRON CORPORATION
5 Hub Drive
Melville, New York 11747

TITLE: CHYRON ANCHOR
VRAM MEZZ BOARD

SH. 1 OF 1

DOCUMENT NUMBER
PRE-PRODUCTION
2A01886

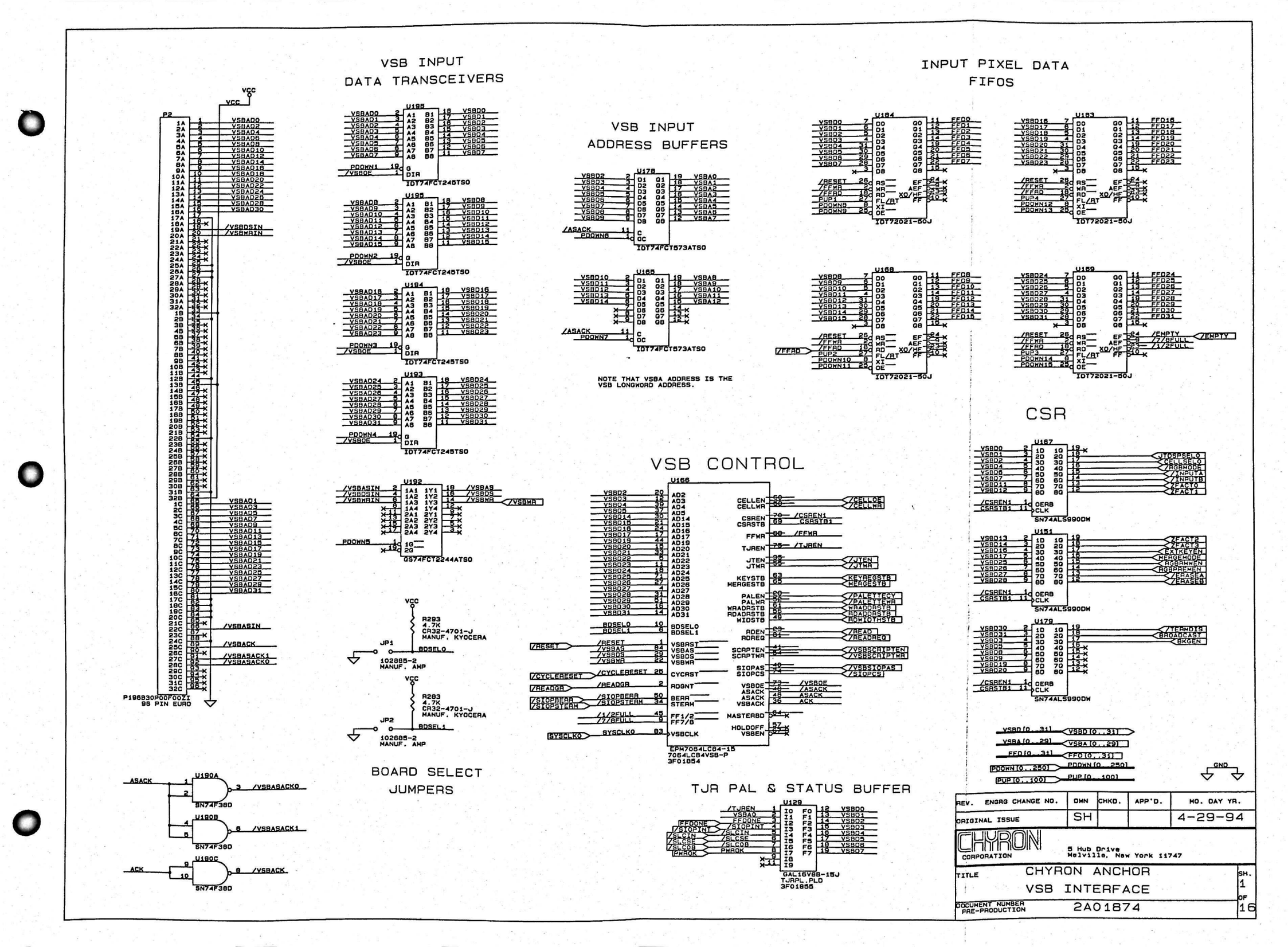
VSB INPUT
DATA TRANSCEIVERS
VSB INPUT
ADDRESS BUFFERS
INPUT PIXEL DATA
FIFOS
CSR
VSB CONTROL
BOARD SELECT
JUMPERS
TJR PAL & STATUS BUFFER
P2
P196830P00F002I
96 PIN EURO
IDT74FCT245TSO
IDT74FCT573ATSO
IDT72021-50J
GS74FCT2244ATSO
SN74ALS990DW
SN74F38D
EPM7064LC84-15
7064LC84VSB-P
3F01854
GAL16V8B-15J
TJRPL.PLD
3F01855
102885-2
MANUF. AMP
R293
4.7K
CR32-4701-J
MANUF. KYOCERA
JP1
JP2
NOTE THAT VSBA ADDRESS IS THE
VSB LONGWORD ADDRESS.
GND
CHYRON
CORPORATION
5 Hub Drive
Melville, New York 11747
REV.
ENGRG CHANGE NO.
DWN
CHKD.
APP'D.
NO. DAY YR.
ORIGINAL ISSUE
SH
4-29-94
TITLE
CHYRON ANCHOR
VSB INTERFACE
SH. 1 OF 16
DOCUMENT NUMBER
PRE-PRODUCTION
2A01874

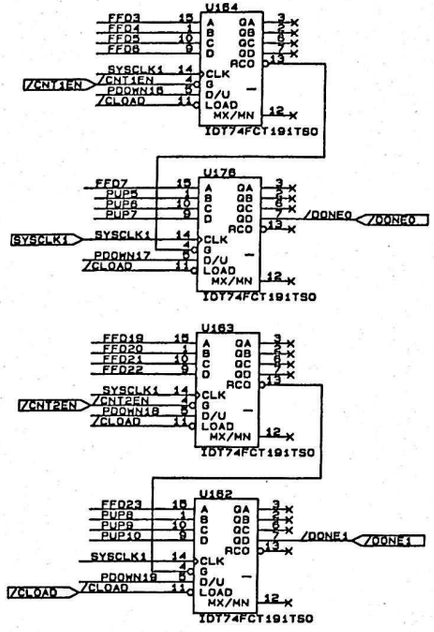

TAG COUNTERS

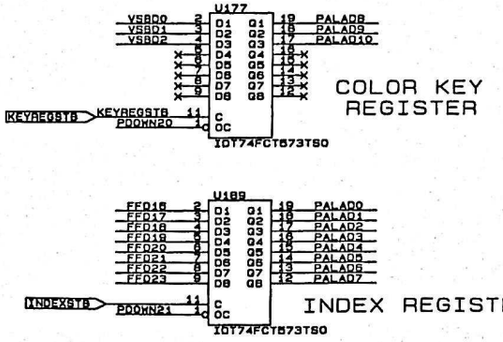

COLOR KEY REGISTER

INDEX REGISTER

TAG AND KEY REGISTERS

RGB INPUT REGISTERS

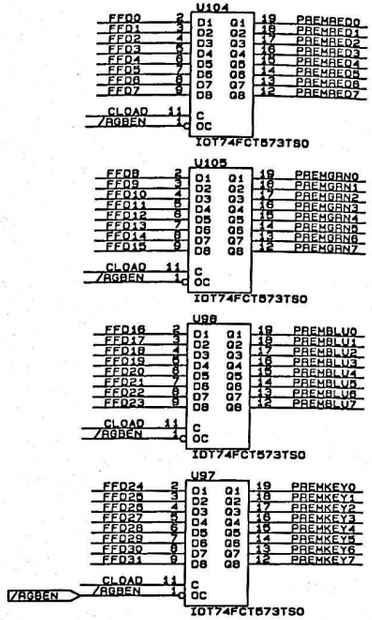

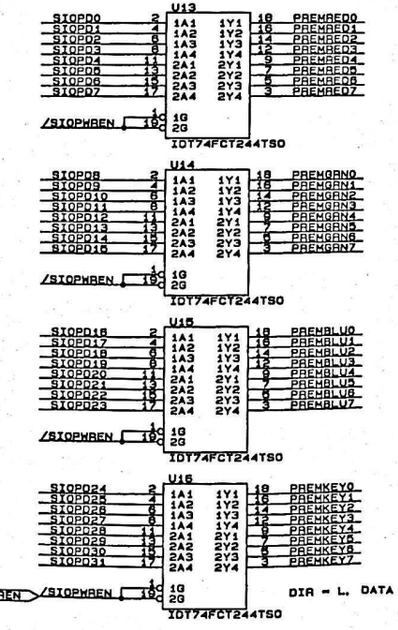

DIR = L, DATA B TO A

SIOP LOCAL WRITE DATA BUFFERS

PALETTE ADDRESS BUFFERS

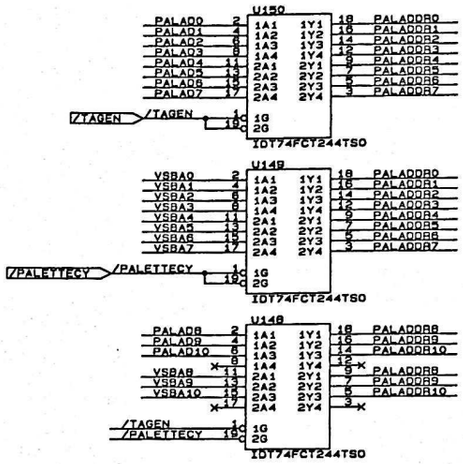

PALETTE DATA TRANSCEIVERS

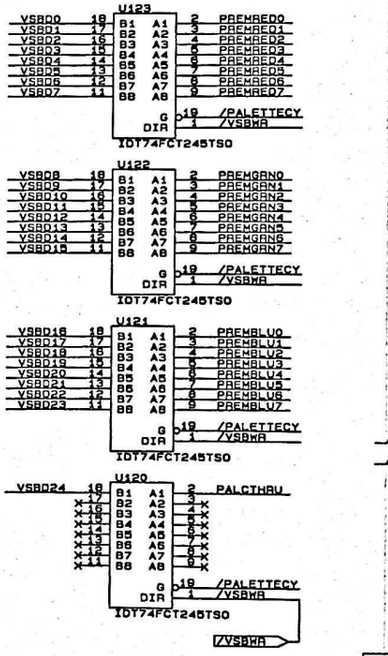

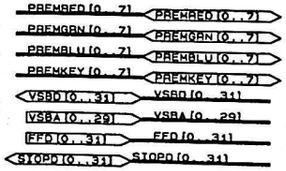

PALETTES

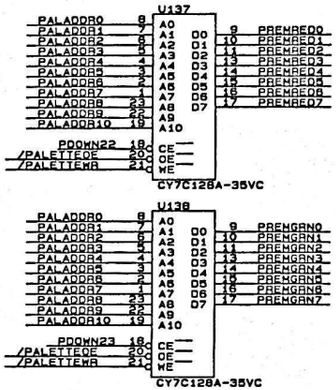

SOJ PACKAGE

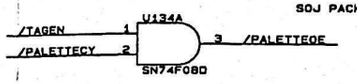

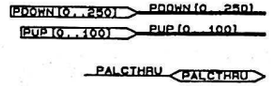

REV.	ENGRG CHANGE NO.	DWN	CHKD.	APP'D.	NO. DAY YR.
	ORIGINAL ISSUE	SH			4-29-94

CHYRON CORPORATION
5 Hub Drive
Melville, New York 11747

TITLE	CHYRON ANCHOR PIXEL DATA INTERFACE	SH. 2 OF 16
DOCUMENT NUMBER PRE-PRODUCTION	2A01874	

RGB X ALPHA MULTIPLIERS

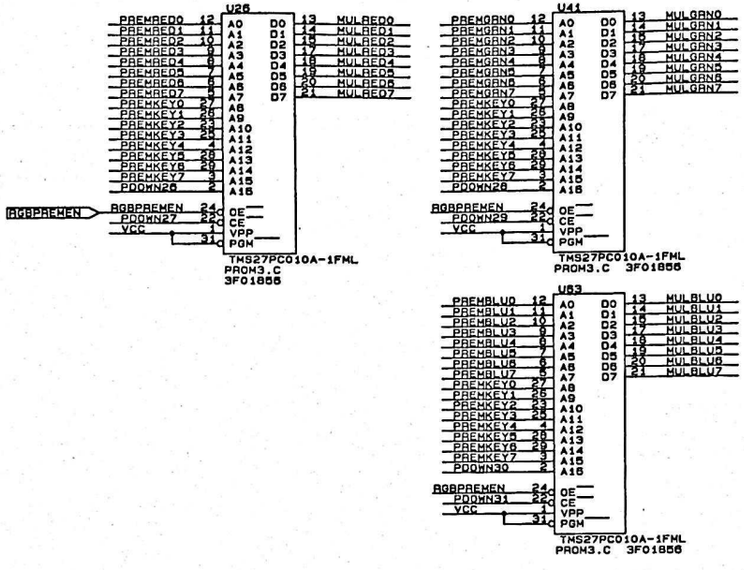

PREMULTIPLIED RGB BUFFERS

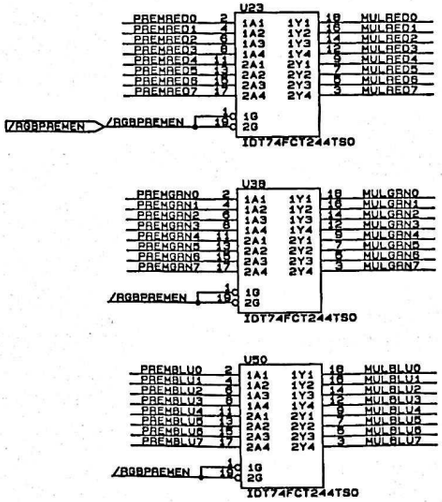

VRAM READ REGISTERS

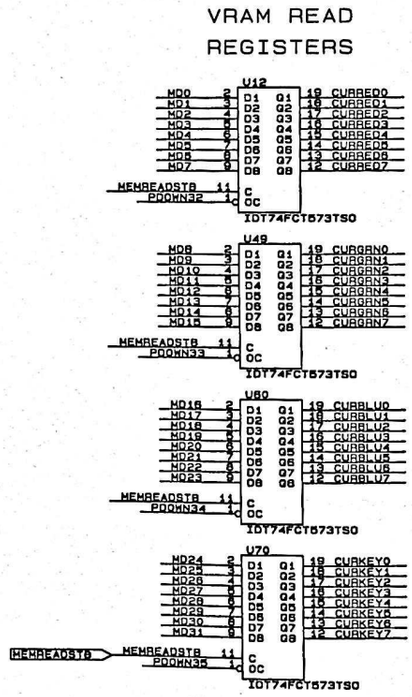

ALPHA EXTRACTOR

FOR VSB READS

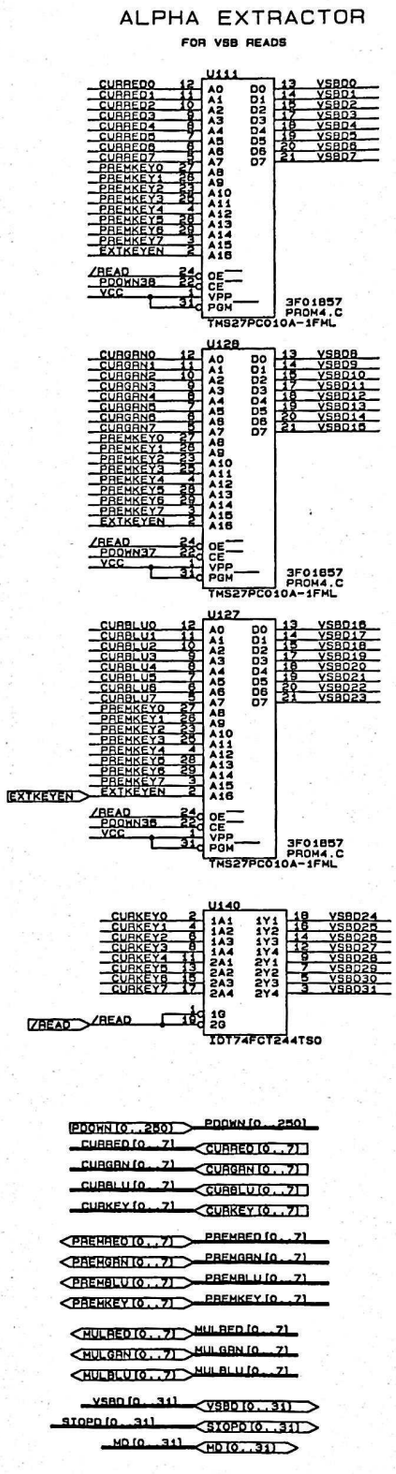

VRAM WRITE ONLY BUFFERS

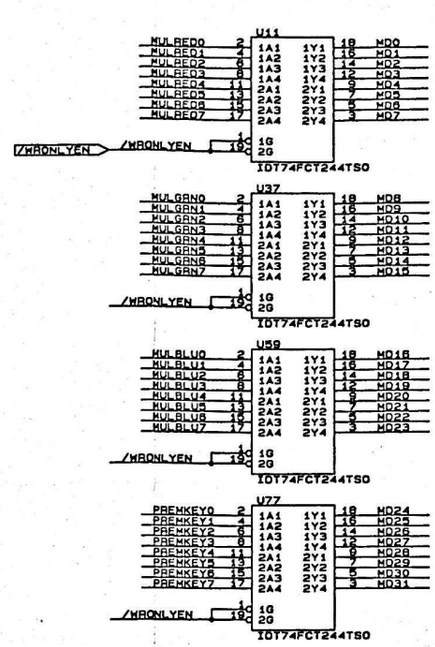

SIOP LOCAL READ BUFFERS

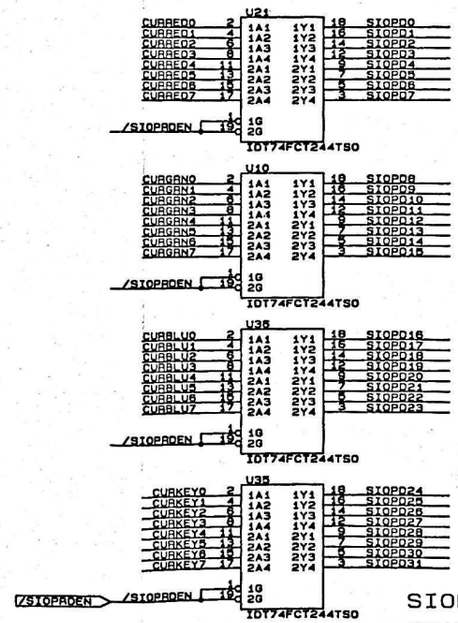

REV.	ENGRG CHANGE NO.	DWN	CHKD.	APP'D.	NO. DAY YR.
	ORIGINAL ISSUE	SH			4-29-94

CHYRON CORPORATION
5 Hub Drive
Melville, New York 11747

TITLE: CHYRON ANCHOR
RGB AND ALPHA MULTIPLIERS

SH. 3 OF 16

DOCUMENT NUMBER PRE-PRODUCTION: 2A01874

CURRENT RGB MULTIPLIERS

CGRB X (1 - S-ALPHA)

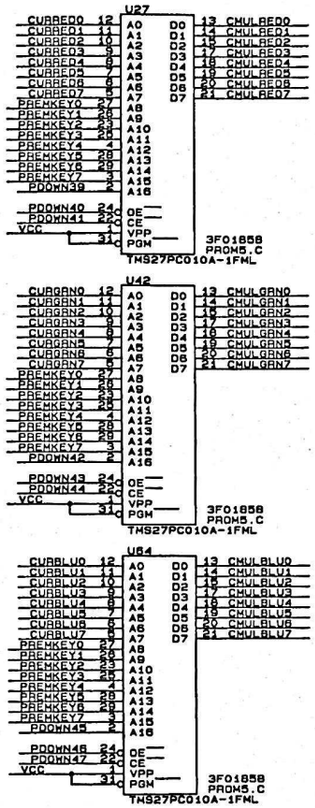

RMW ADDERS

MULRGB + CURRGB (1 - ALPHA)

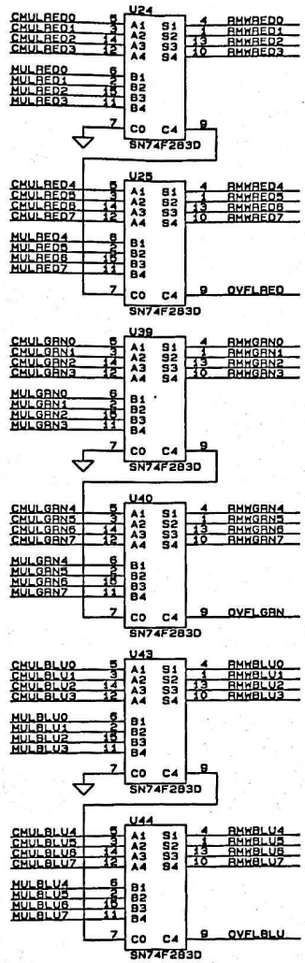

CARRY OUT IS USED TO ENSURE THAT THERE IS NO OVERFLOW.

RMW BUFFERS

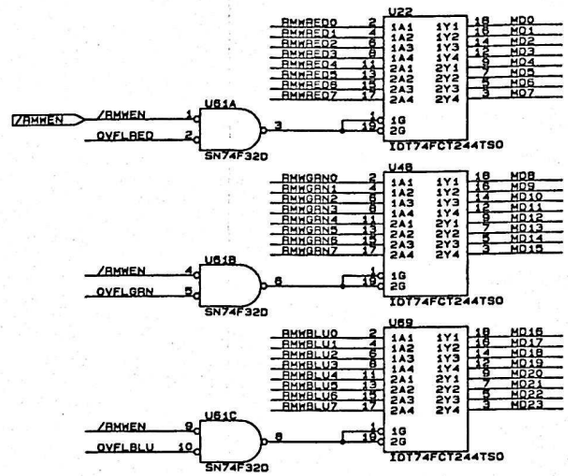

ALPHA MULTIPLIER

S-ALPHA + C-ALPHA (1 - S-ALPHA)

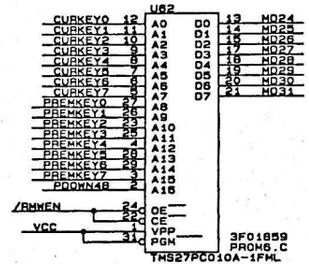

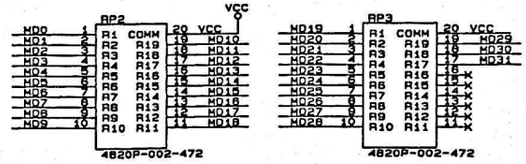

VRAM DATA BUS PULL-UPS

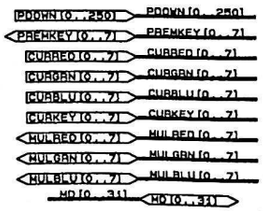

REV.	ENGRG CHANGE NO.	DWN	CHKD.	APP'D.	MO. DAY YR.
ORIGINAL ISSUE		SH			4-29-94

CHYRON CORPORATION
5 Hub Drive
Melville, New York 11747

TITLE	CHYRON ANCHOR RMW LOGIC	SH. 4 OF 16
DOCUMENT NUMBER PRE-PRODUCTION	2A01874	

JUMP TABLES

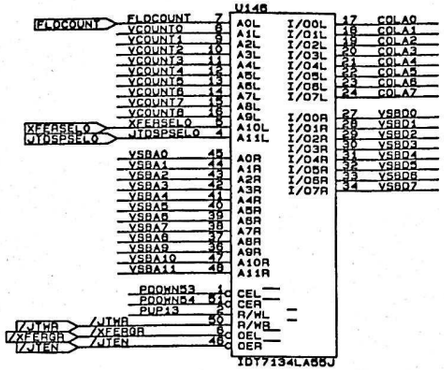

PIXEL AND LINE ADDRESS COUNTERS

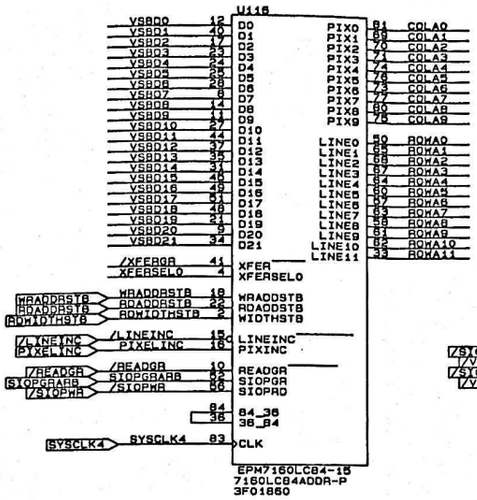

RDADDRSEL SHOULD BE IMPLICIT IN THE OPERATION.

SCRIPTS RAM

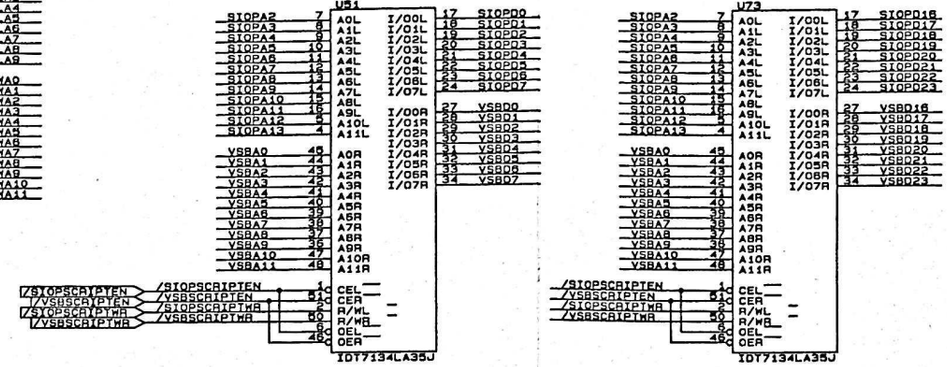

ROW / COLUMN ADDRESS MUX

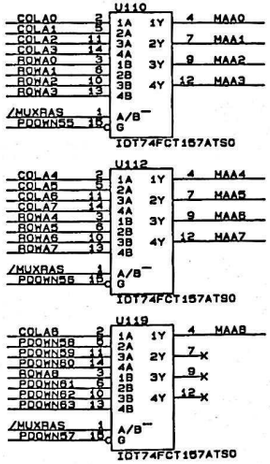

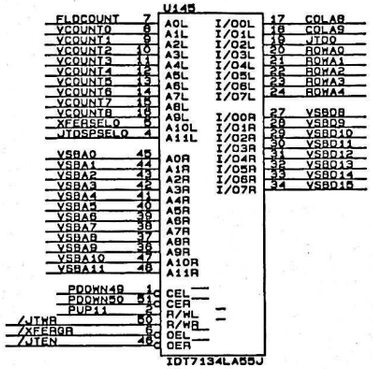

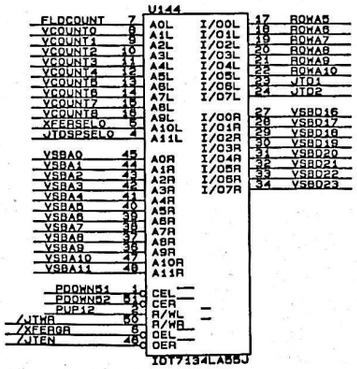

"/XFERGA" IS USED SO OUTPUTS OF JUMP TABLES CAN BE TRISTATED WITH OTHER ROW/COLUMN REGISTERS

NEED MECHANISM TO DISTINGUISH "BUFFER SELECT" DURING XFERS SO THAT THE FULL ADDRESS CAN GO TO THE ROW/COLUMN BUS.

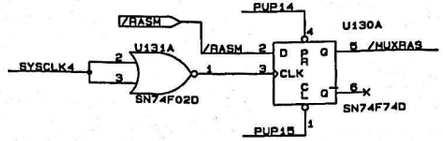

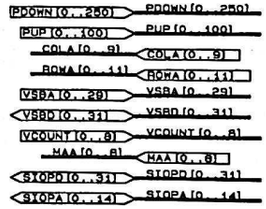

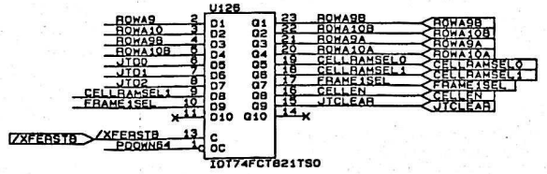

JUMP TABLE XFER DATA REGISTERS

REV.	ENGRG CHANGE NO.	DWN	CHKD.	APP'D.	MO. DAY YR.
ORIGINAL ISSUE		SH			4-29-94

CHYRON CORPORATION
5 Hub Drive
Melville, New York 11747

TITLE	CHYRON ANCHOR JUMP TABLES	SH.	5
DOCUMENT NUMBER PRE-PRODUCTION	2A01874	OF	16

SIOP

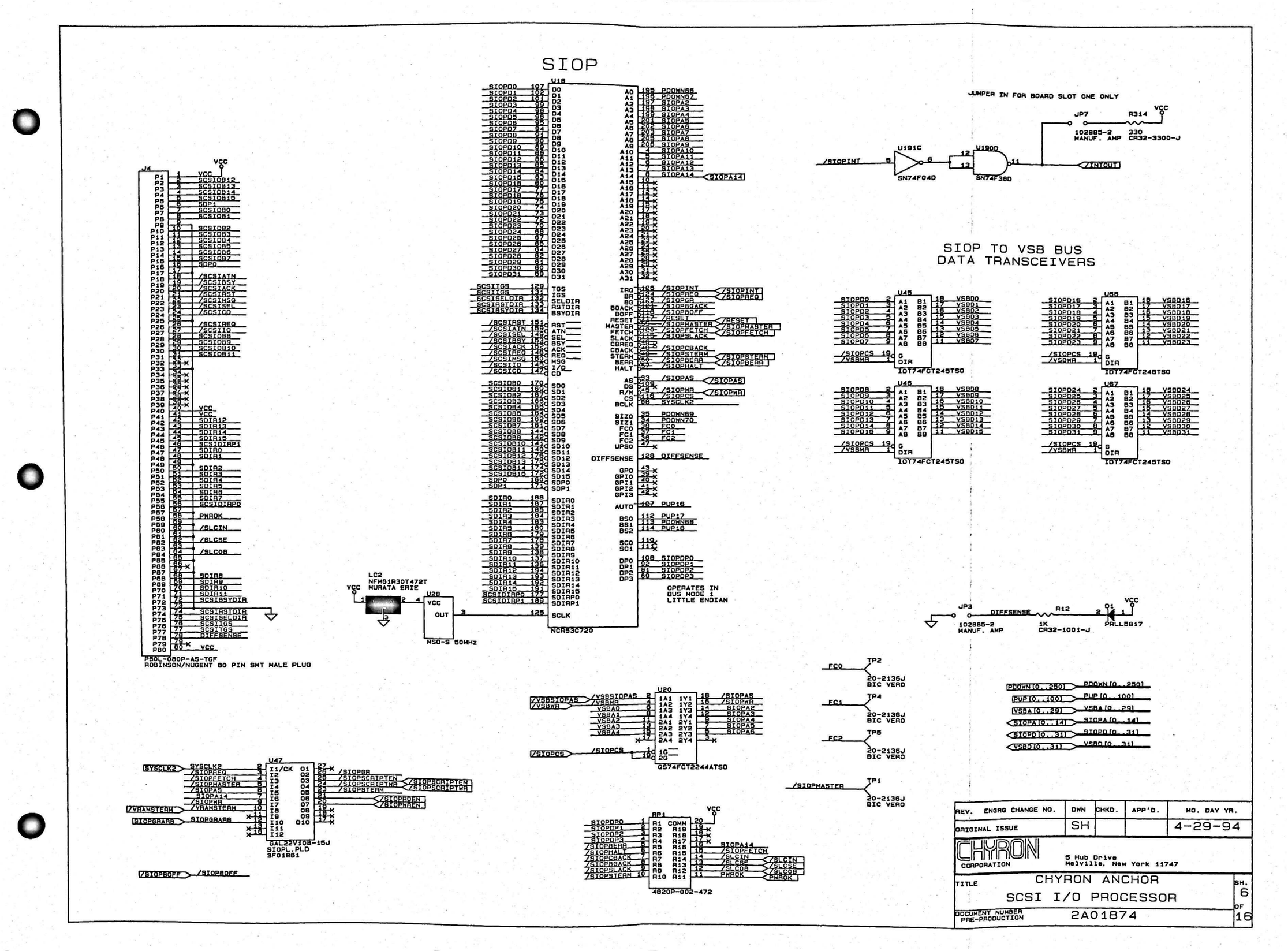

REV.	ENGRG CHANGE NO.	DWN	CHKD.	APP'D.	NO. DAY YR.
ORIGINAL ISSUE		SH			4-29-94

CHYRON CORPORATION
5 Hub Drive
Melville, New York 11747

TITLE
CHYRON ANCHOR
SCSI I/O PROCESSOR

SH. 6 OF 16

DOCUMENT NUMBER
PRE-PRODUCTION
2A01874

BUS ARBITER

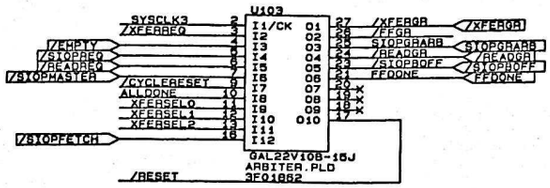

BUFFER

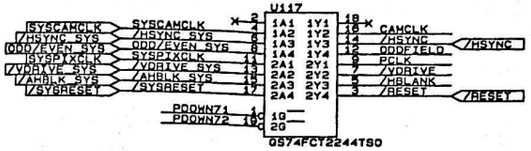

RAS PAL

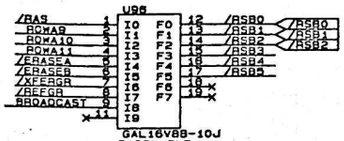

VRAM CONTROLLER

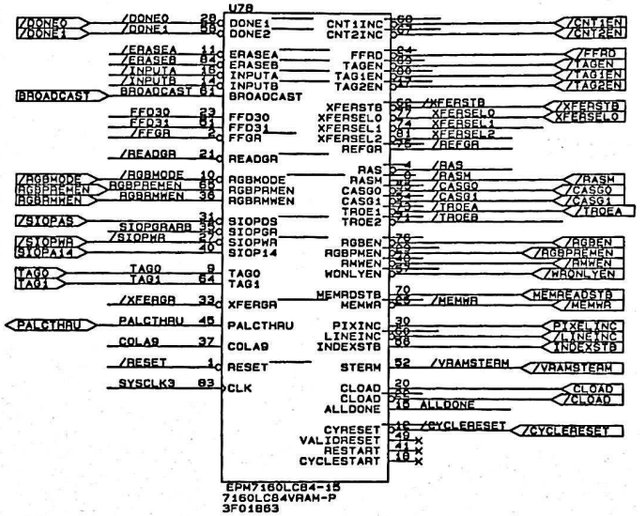

/VRAMSTERM
NOT TRI-ST.

H COUNTER AND SOE GENERATOR

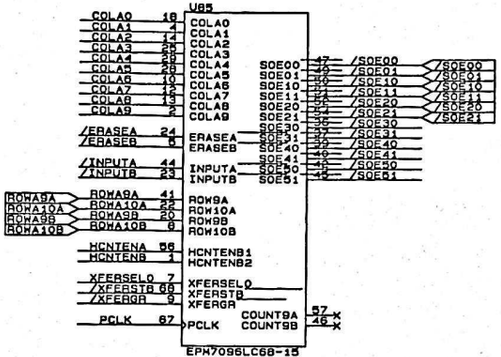

PIXEL CLOCK BUFFERS

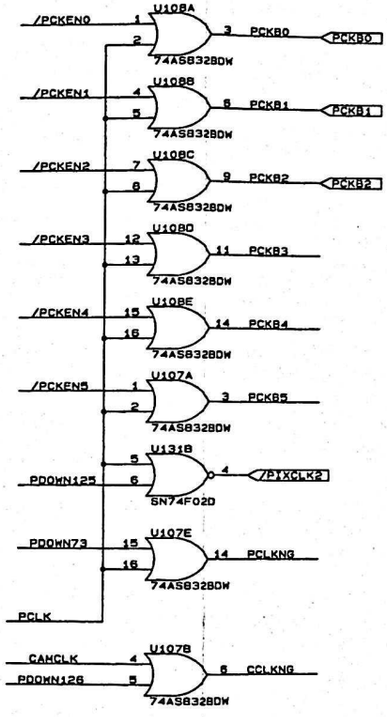

MEZZANINE CONNECTOR

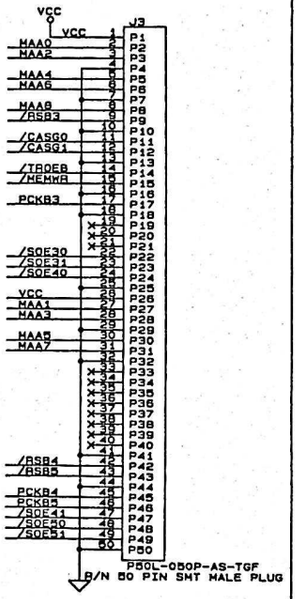

PIXEL CLOCK CONTROL

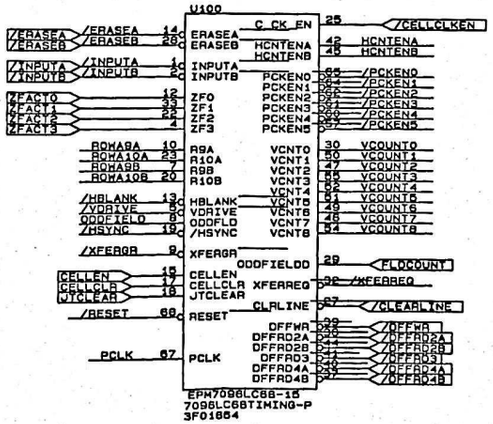

PIX CLOCK DRIVER

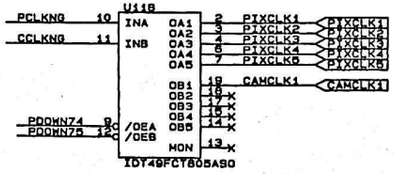

SYS CLOCK DRIVER

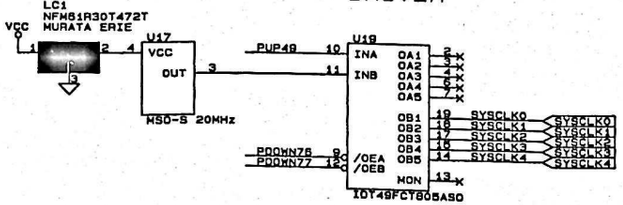

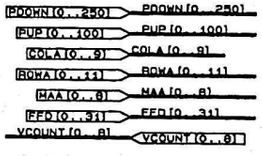

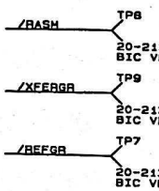

REV.	ENGRG CHANGE NO.	DWN	CHKD.	APP'D.	MO. DAY YR.
ORIGINAL ISSUE		SH			4-29-94

CHYRON CORPORATION
5 Hub Drive
Melville, New York 11747

TITLE: CHYRON ANCHOR
VRAM CONTROLLER & ARBITER

SH. 7 OF 16

DOCUMENT NUMBER
PRE-PRODUCTION
2A01874

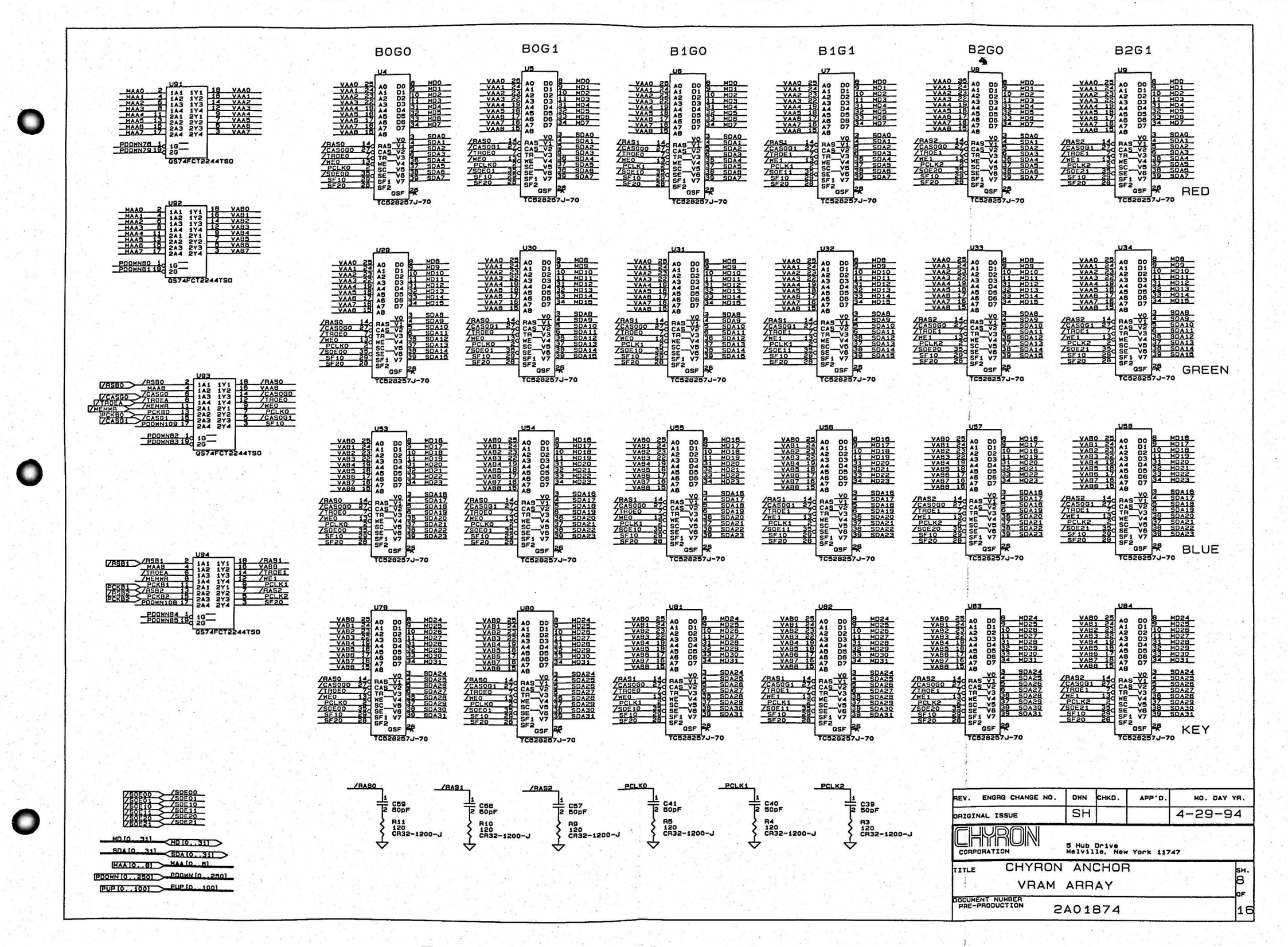

REV.	ENGRG CHANGE NO.	DWN	CHKD.	APP'D.	NO. DAY YR.
ORIGINAL ISSUE		SH			4-29-94

CHYRON CORPORATION
5 Hub Drive
Melville, New York 11747

TITLE: CHYRON ANCHOR
VRAM ARRAY

DOCUMENT NUMBER
PRE-PRODUCTION
2A01874

SH. 8 OF 16

KEY SCALERS

8 BITS TO 9 BITS

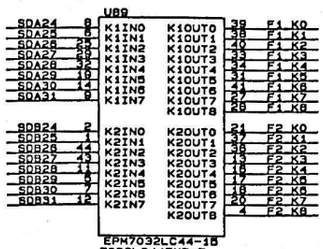

COEFF MUX CONTROL

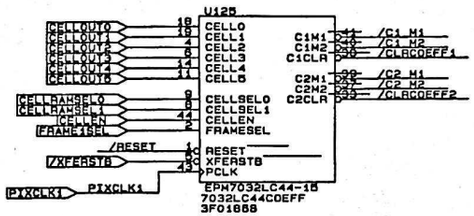

MERGE REGISTERS

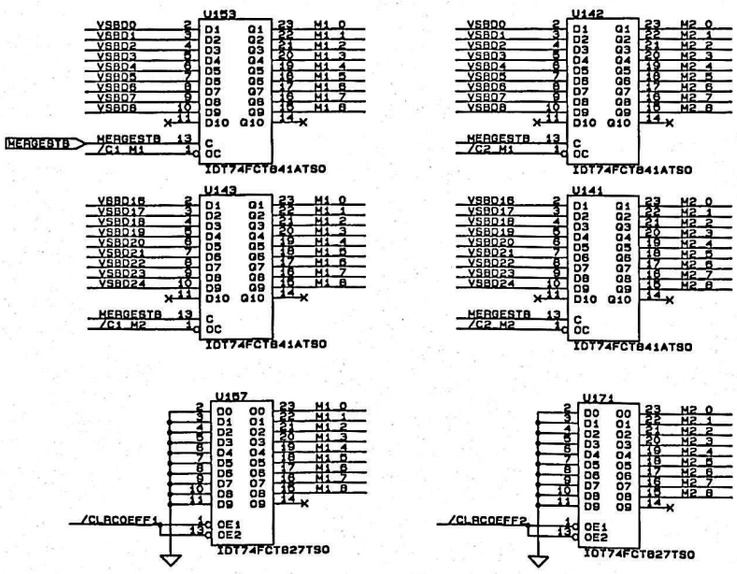

M1*K1

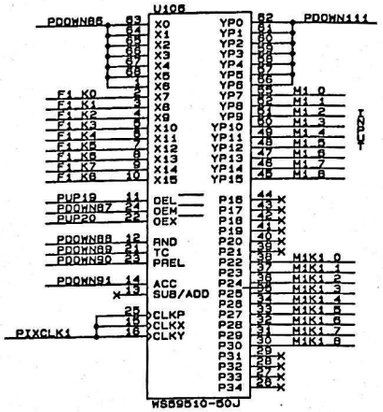

1-M1K1

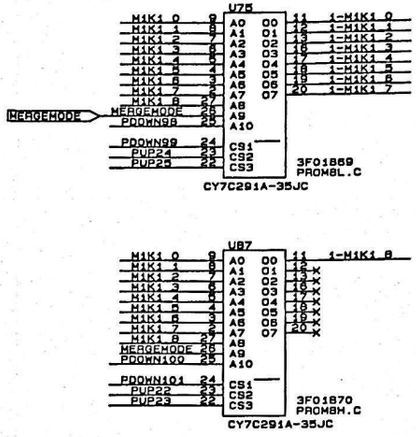

1-M1K1 = 1 - M1K1 OR "1" DEPENDING ON MERGE MODE.

C2 = M2*(1-M1K1)

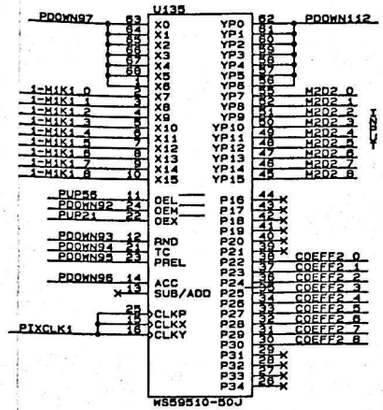

COEFF2 = (1-M1K1)*M2

OR COEFF2 = M2

DEPENDING ON MERGE MODE.

M1K1 DELAY FIFO

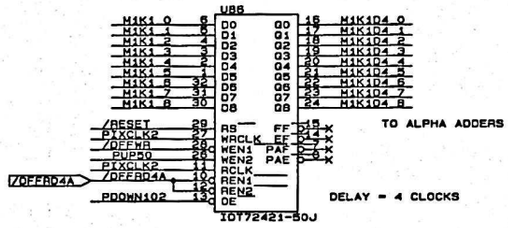

M1 DELAY FIFO

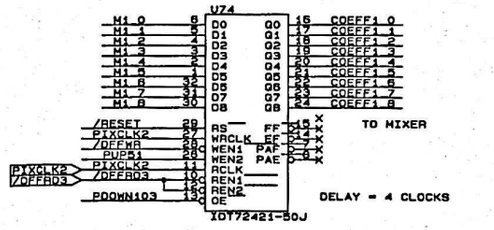

M2 DELAY FIFO

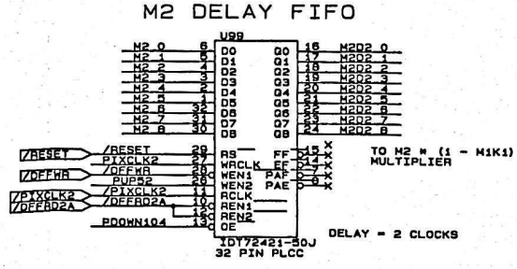

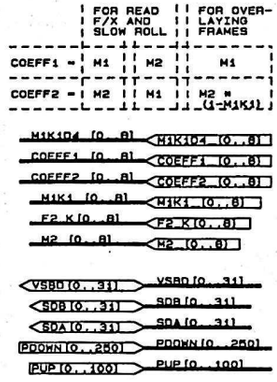

REV.	ENGRG CHANGE NO.	DWN	CHKD.	APP'D.	MO. DAY YR.
ORIGINAL ISSUE		SH			4-29-94

CHYRON CORPORATION
5 Hub Drive
Melville, New York 11747

TITLE: CHYRON ANCHOR
COEFFICIENT GENERATOR

SH. 9 OF 16

DOCUMENT NUMBER
PRE-PRODUCTION 2A01874

K2 DELAY FIFO

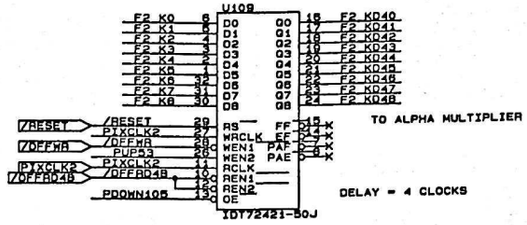

ADDER

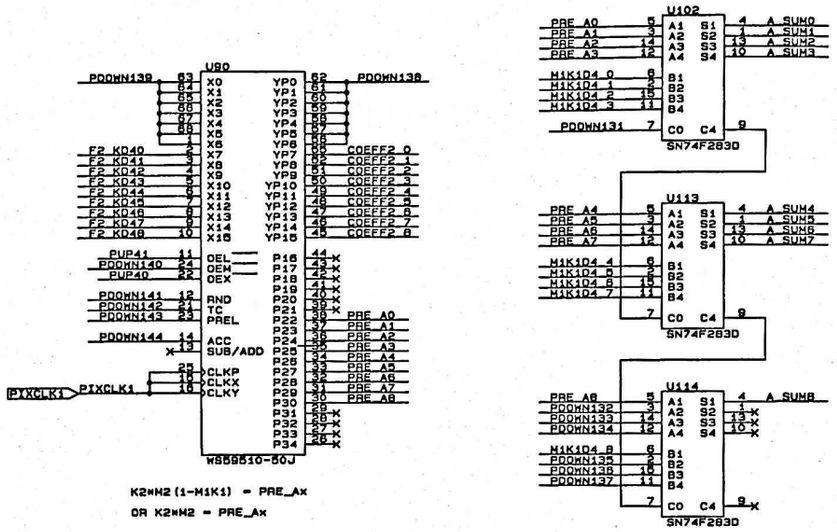

UNSCALING PROM
(9bits TO 8bits)

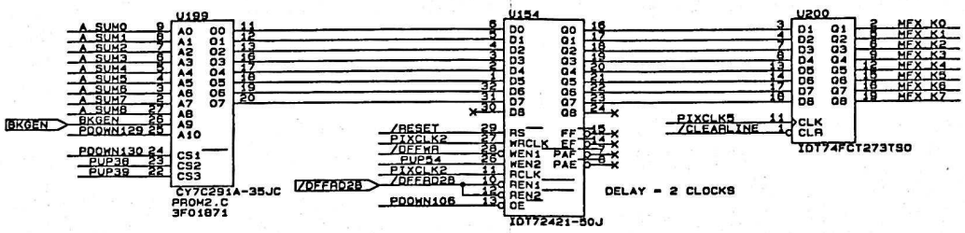

PIXCLK5 PIXCLK5

/CLEARLINE /CLEARLINE

RGB DELAY REGISTERS

DELAY = 4 CLOCKS

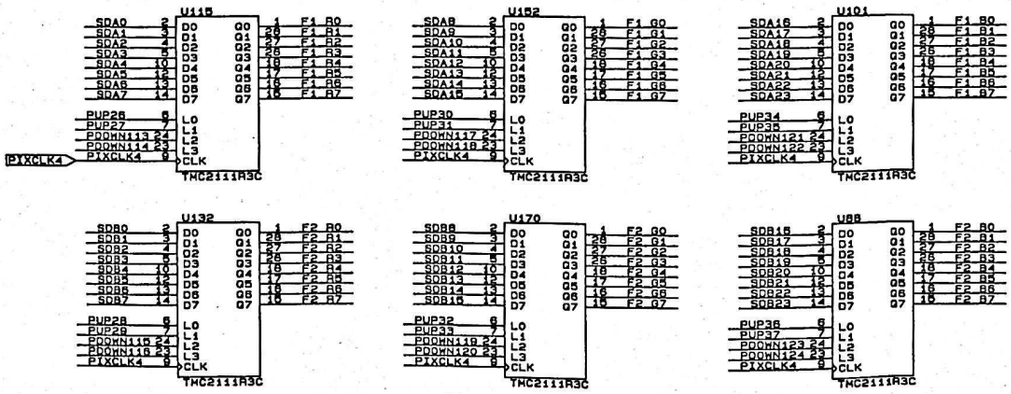

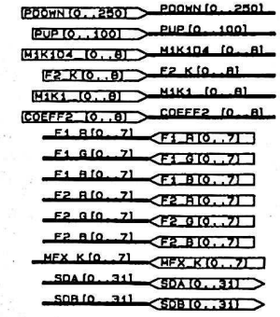

REV.	ENGRG CHANGE NO.	DWN	CHKD.	APP'D.	MO. DAY YR.
ORIGINAL ISSUE		TF			4-29-94

CHYRON CORPORATION
5 Hub Drive
Melville, New York 11747

TITLE: CHYRON ANCHOR
ALPHA GENERATOR

SH. 10 OF 16

DOCUMENT NUMBER
PRE-PRODUCTION 2A01874

VIDEO INPUT REGISTERS

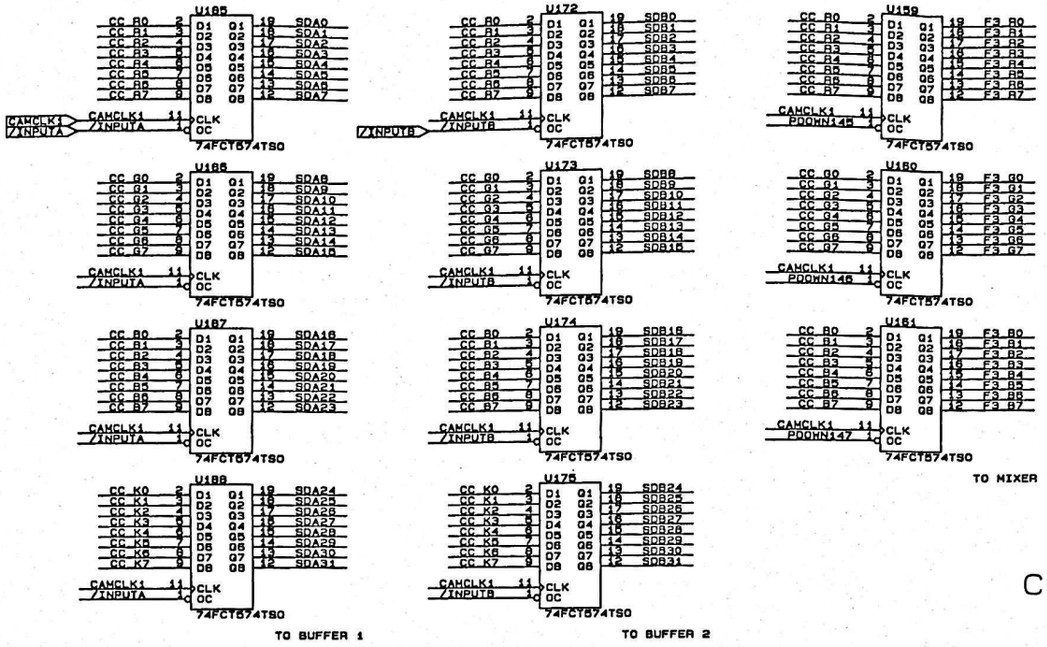

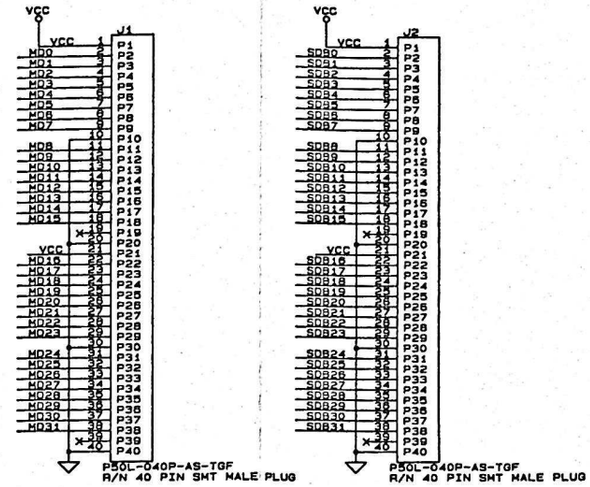

CELL RAM

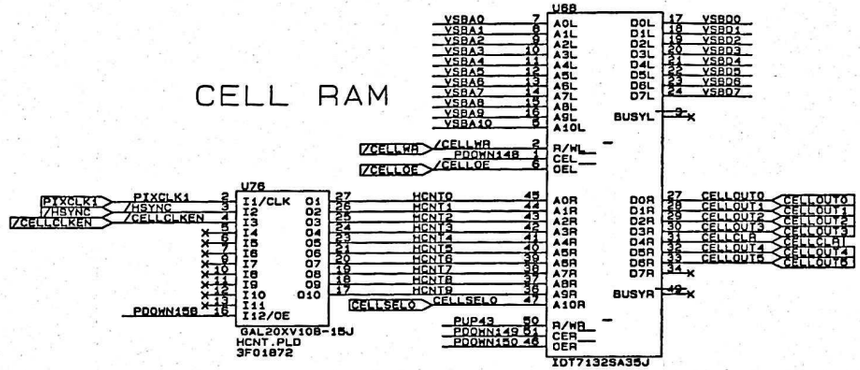

BACKGROUND COEFFICIENT GENERATOR

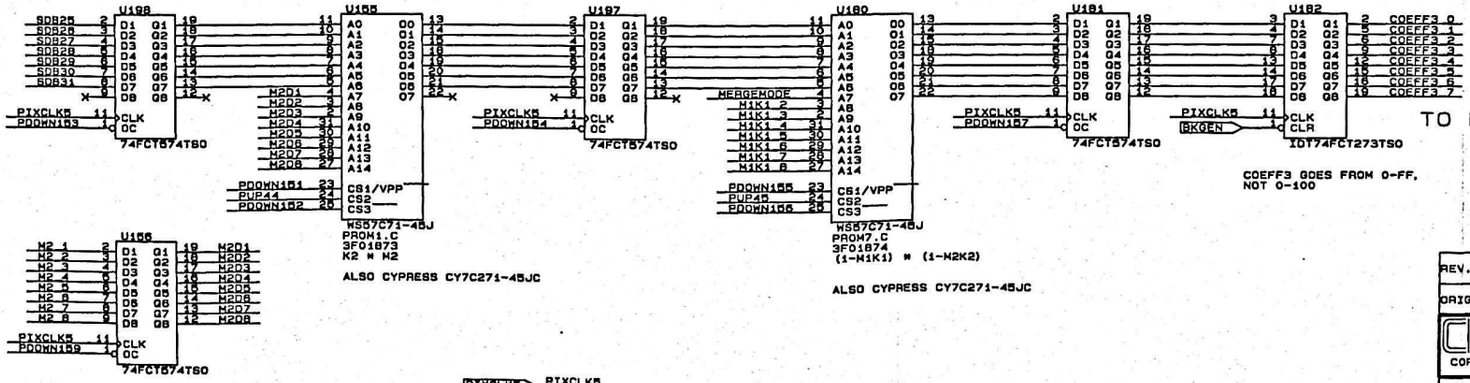

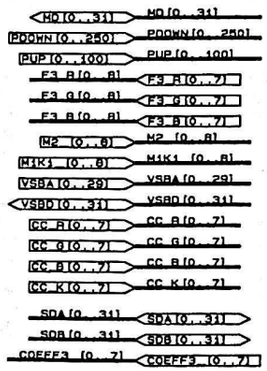

REV.	ENGRG CHANGE NO.	DWN	CHKD.	APP'D.	NO. DAY YR.
ORIGINAL ISSUE		SH			4-29-94

CHYRON CORPORATION
5 Hub Drive
Melville, New York 11747

TITLE	CHYRON ANCHOR VIDEO INPUT REGISTERS	SH. 11 OF 16
DOCUMENT NUMBER	2A01874	
PRE-PRODUCTION		

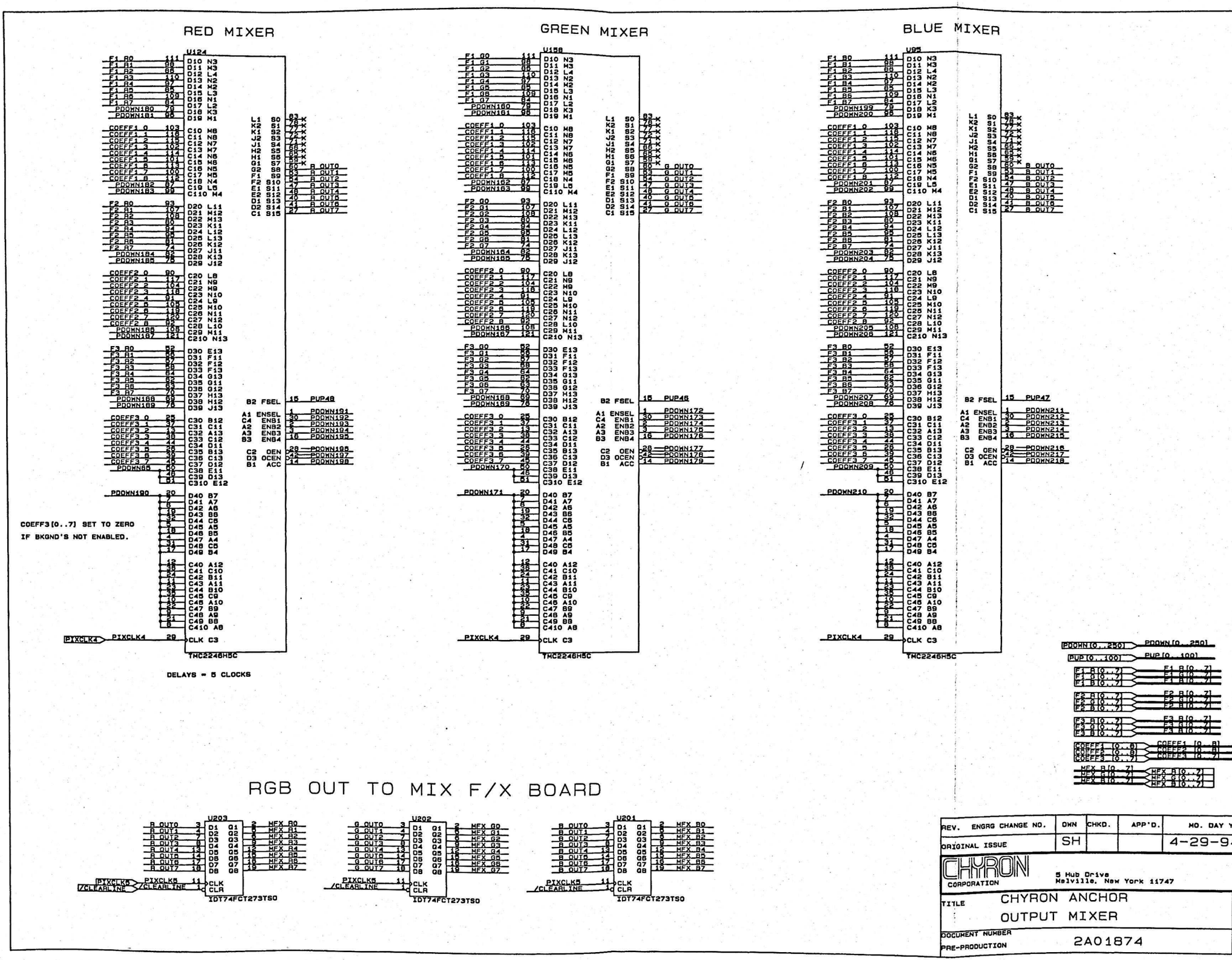
RED MIXER
GREEN MIXER
BLUE MIXER
U124
U156
U95
TMC2246H5C
COEFF3[0..7] SET TO ZERO
IF BKGND'S NOT ENABLED.
DELAYS = 5 CLOCKS
RGB OUT TO MIX F/X BOARD
U203
U202
U201
IDT74FCT273TSO
CHYRON CORPORATION
5 Hub Drive
Melville, New York 11747
REV. ENGRG CHANGE NO.
DWN
CHKD.
APP'D.
MO. DAY YR.
ORIGINAL ISSUE
SH
4-29-94
TITLE
CHYRON ANCHOR
OUTPUT MIXER
SH. 12 OF 16
DOCUMENT NUMBER
PRE-PRODUCTION
2A01874

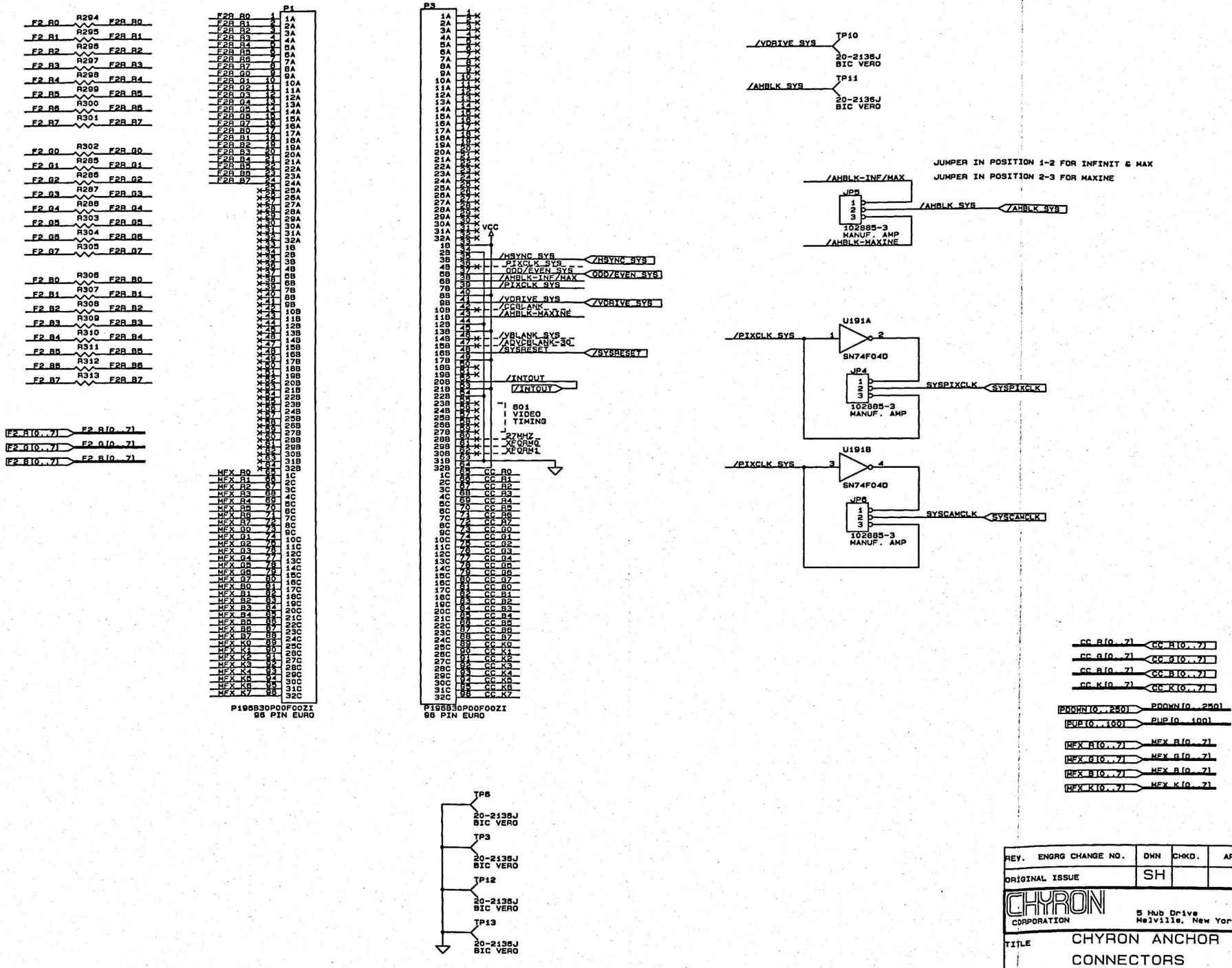

REV.	ENGRG CHANGE NO.	DWN	CHKD.	APP'D.	MO. DAY YR.
	ORIGINAL ISSUE	SH			4-29-94

CHYRON CORPORATION
5 Hub Drive
Melville, New York 11747

TITLE: CHYRON ANCHOR CONNECTORS

SH. 13 OF 16

DOCUMENT NUMBER
PRE-PRODUCTION
2A01874

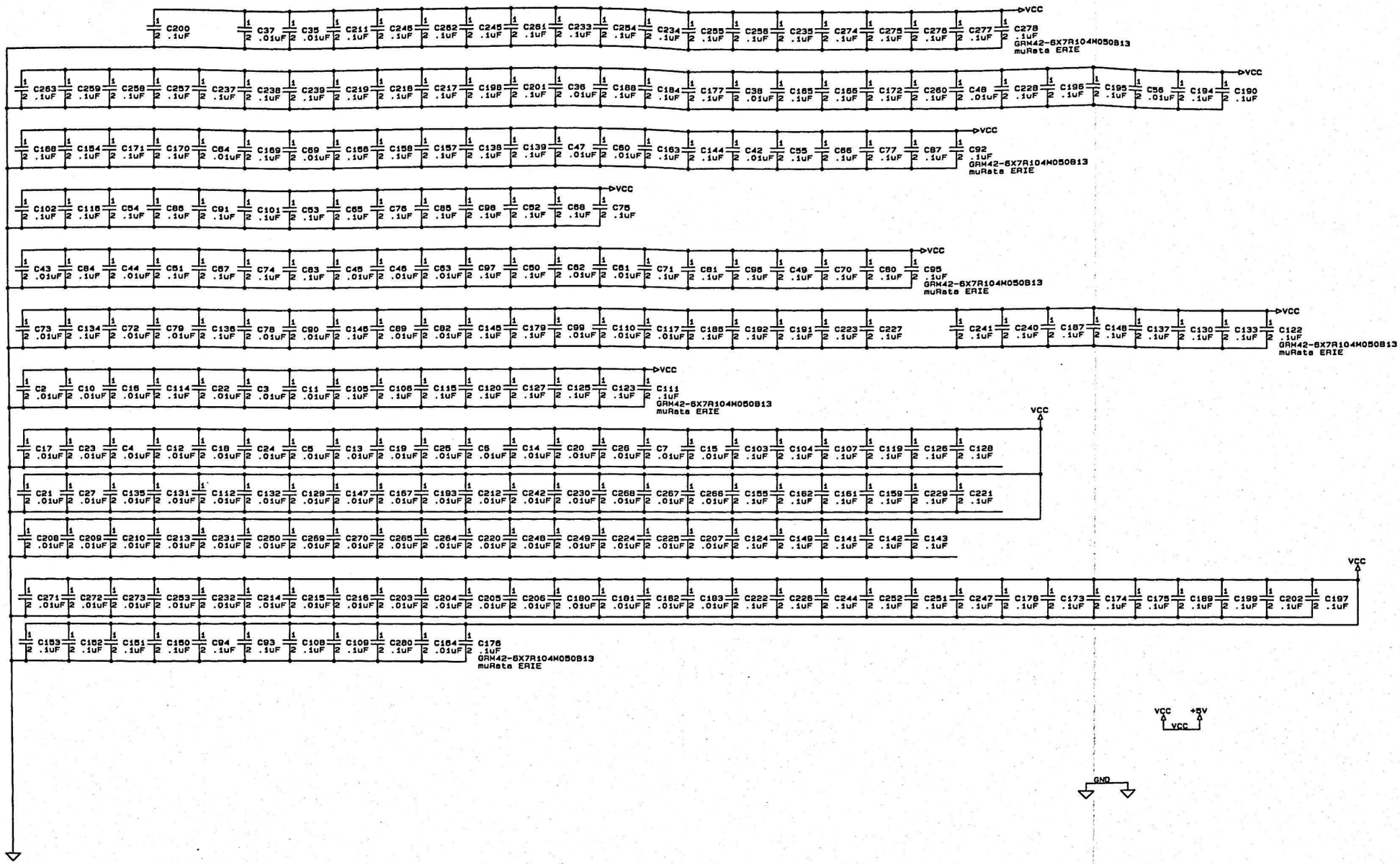

REV.	ENGRG CHANGE NO.	DWN	CHKD.	APP'D.	MO. DAY YR.
ORIGINAL ISSUE		TF			6-7-94

CHYRON CORPORATION
5 Hub Drive
Melville, New York 11747

TITLE: CHYRON ANCHOR
CAPS ETC

DOCUMENT NUMBER
PRE-PRODUCTION 2A01874

SH. 14 OF 16

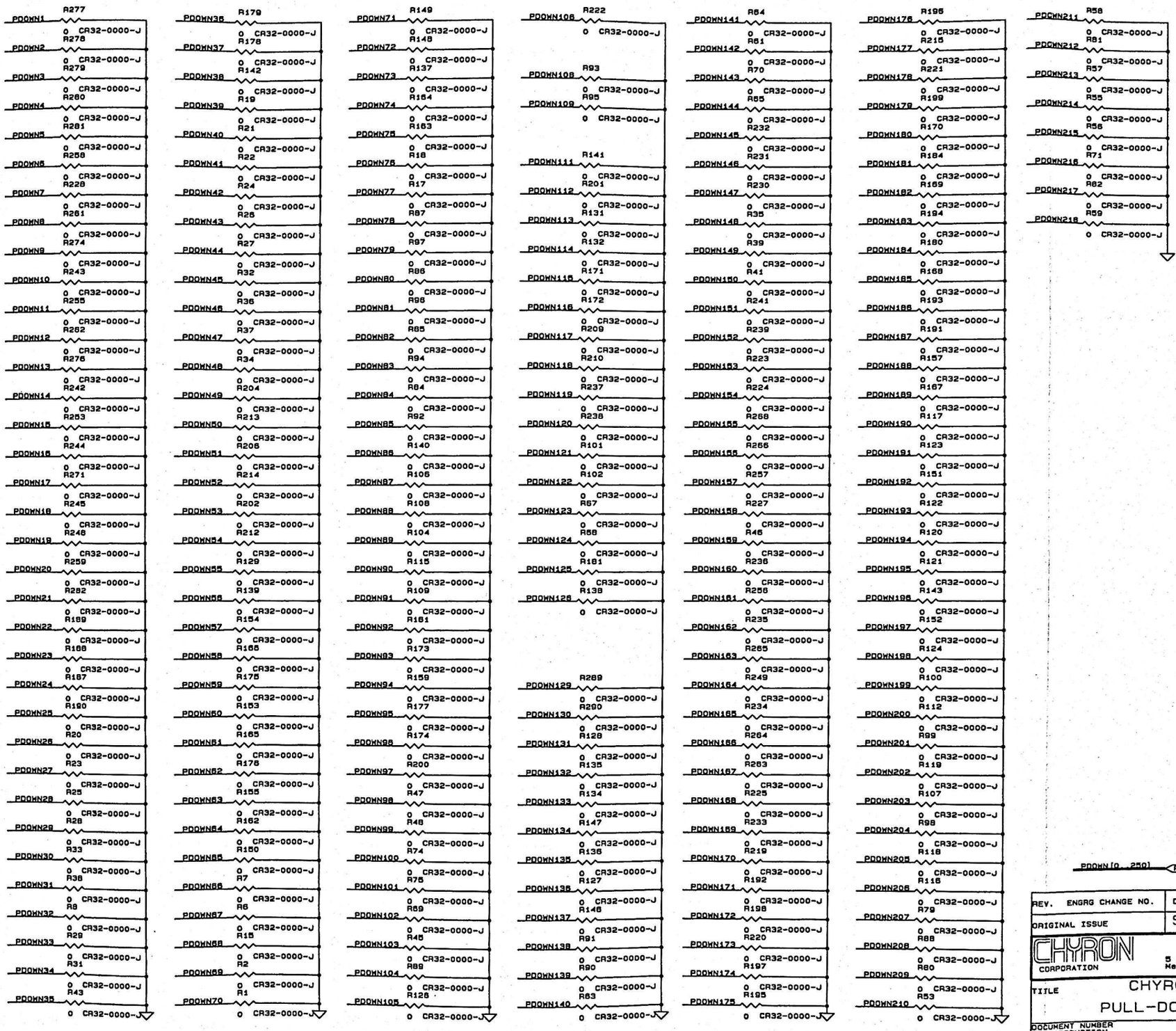

REV.	ENGRG CHANGE NO.	DWN	CHKD.	APP'D.	NO. DAY YR.
	ORIGINAL ISSUE	SH			4-29-94

CHYRON CORPORATION
5 Hub Drive
Melville, New York 11747

TITLE: CHYRON ANCHOR PULL-DOWN RESISTORS

DOCUMENT NUMBER PRE-PRODUCTION: 2A01874

SH. 15 OF

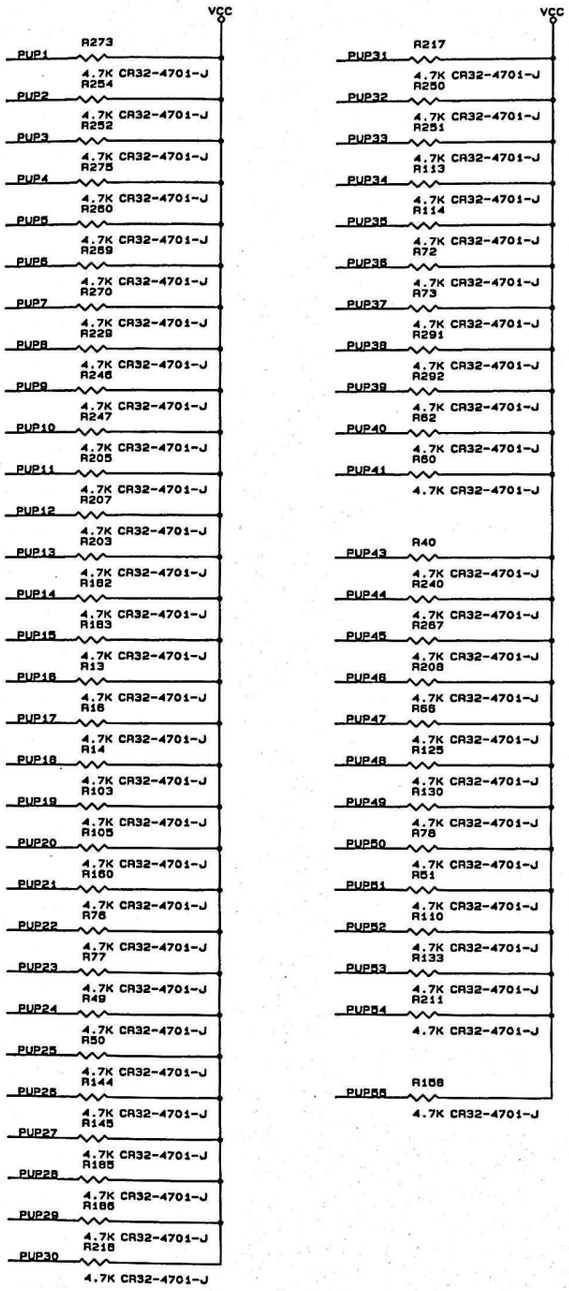

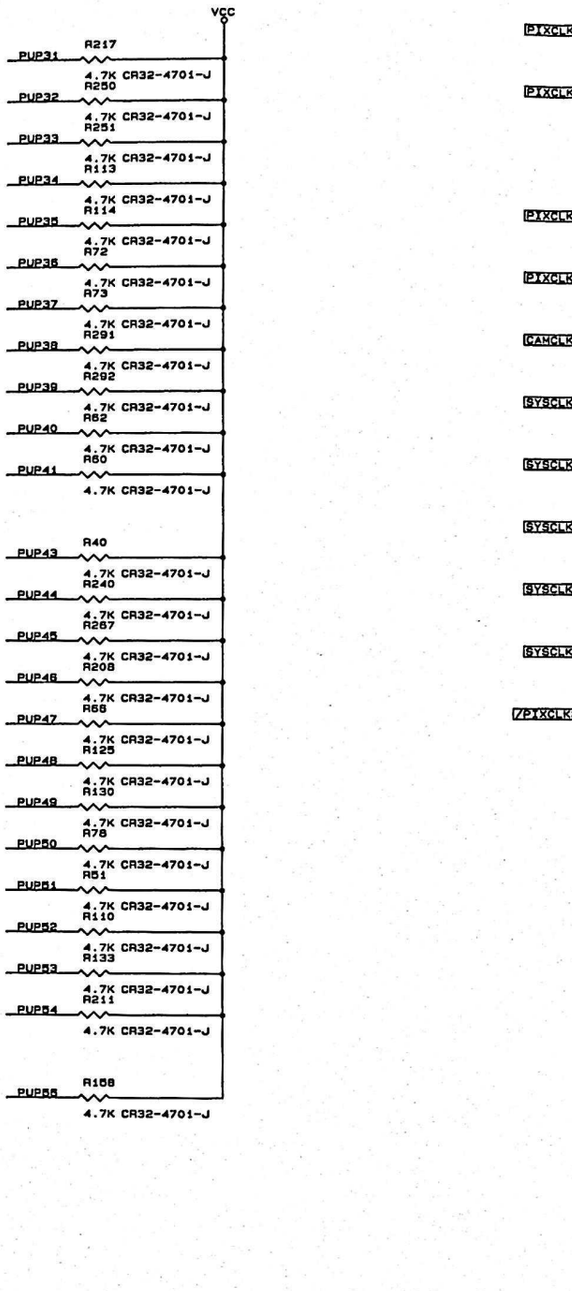

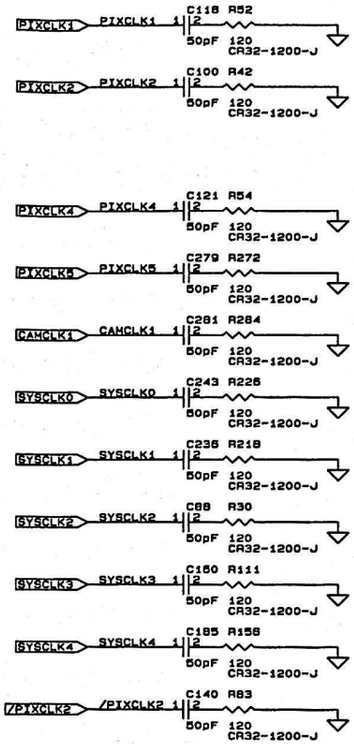

PUP[0..100] — PUP[0..100]

REV.	ENGRG CHANGE NO.	DWN	CHKD.	APP'D.	MO. DAY YR.
ORIGINAL ISSUE		SH			4-29-94

CHYRON CORPORATION
5 Hub Drive
Melville, New York 11747

TITLE: CHYRON ANCHOR
PULL-UP RESISTORS

SH. 16 OF 16

DOCUMENT NUMBER
PRE-PRODUCTION
2A01874